25mm Pushbutton Switches

multicomp PRO

RoHS Compliant

MP005732

MP005733

MP005734

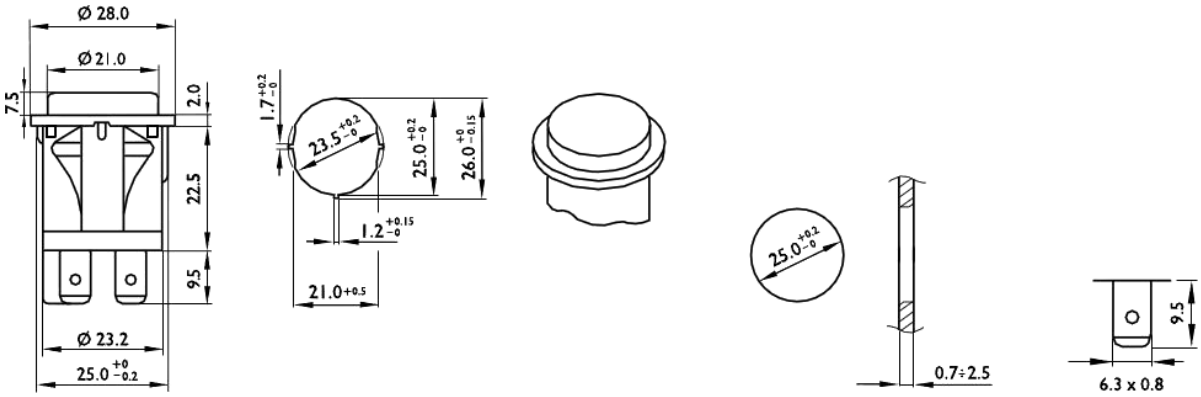

Typical Applications	Vacuum and Steam Cleaners
Functions	SPST, Momentary or not SPST, Illuminated or not DPST, Illuminated or not
Cycle No.	50.000
Cut Out	ø 25mm
Ambient Temperature	120°C
GWT	850°C
GWT No Flame (<2Sec)	750°C on Demand

Dimensions : Millimetres

Specifications Table

Part Number	Rating	Actuator Colour	Body Colour	Marking	Switch Action	Illumination Type
MP005732	16(6)A / 250V AC	Red	Black	-	SP Momentary	Non-illuminated
MP005733		Green			DP Latching	Illuminated
MP005734		Red				

Important Notice : This data sheet and its contents (the "Information") belong to the members of the AVNET group of companies (the "Group") or are licensed to it. No licence is granted for the use of it other than for information purposes in connection with the products to which it relates. No licence of any intellectual property rights is granted. The Information is subject to change without notice and replaces all data sheets previously supplied. The Information supplied is believed to be accurate but the Group assumes no responsibility for its accuracy or completeness, any error in or omission from it or for any use made of it. Users of this data sheet should check for themselves the Information and the suitability of the products for their purpose and not make any assumptions based on information included or omitted. Liability for loss or damage resulting from any reliance on the Information or use of it (including liability resulting from negligence or where the Group was aware of the possibility of such loss or damage arising) is excluded. This will not operate to limit or restrict the Group's liability for death or personal injury resulting from its negligence. Multicomp Pro is the registered trademark of Premier Farnell Limited 2019.