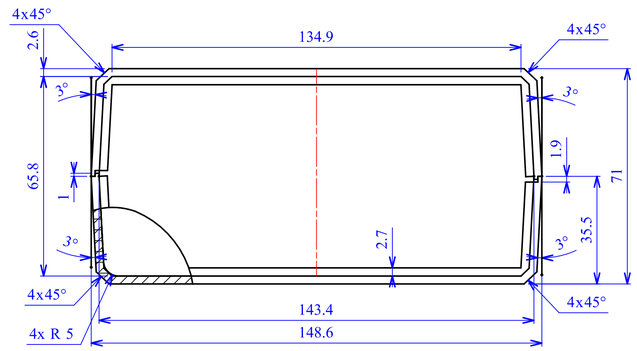
4x45°
134.9
2.6
3°
65.8
1
1.9
71
35.5
2.7
143.4
148.6
4x R 5

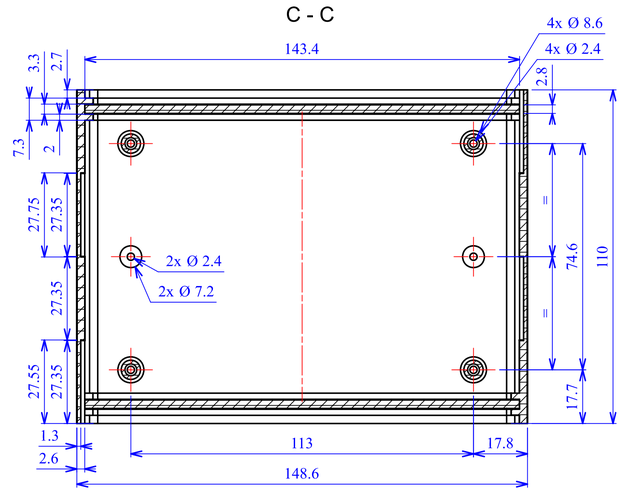
C - C
143.4
4x Ø 8.6
4x Ø 2.4
3.3
2.7
2.8
7.3
2
27.75
27.35
27.55
2x Ø 2.4
2x Ø 7.2
74.6
110
17.7
1.3
2.6
113
17.8
148.6

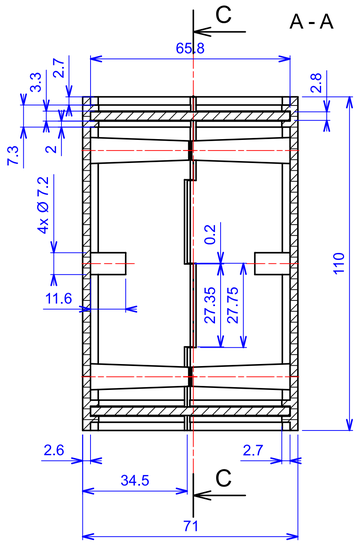
C
A - A
65.8
3.3
2.7
2.8
7.3
2
4x Ø 7.2
0.2
11.6
27.35
27.75
110
2.6
34.5
71

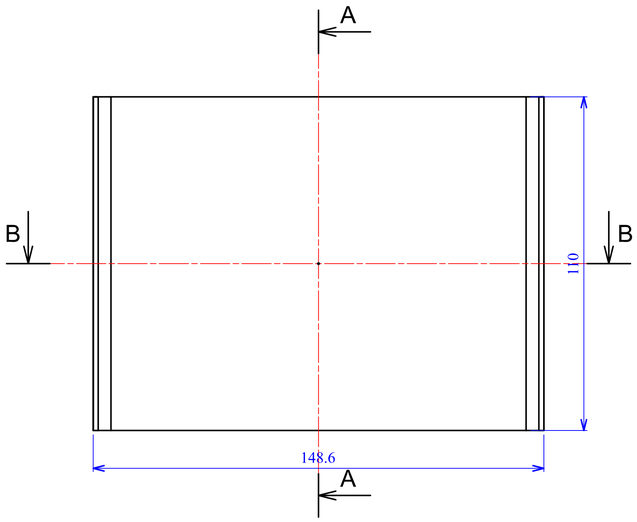
A
B
110
148.6

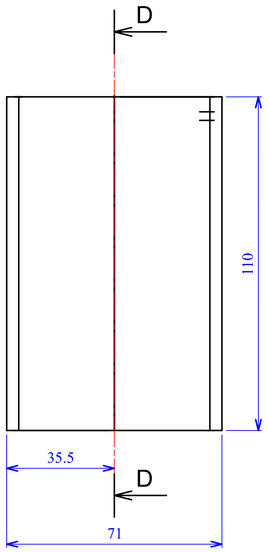
D
110
35.5
71

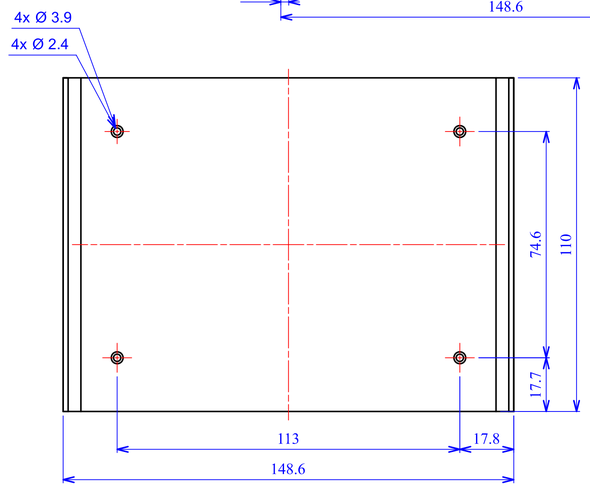
4x Ø 3.9
4x Ø 2.4
74.6
110
17.7
113
17.8
148.6

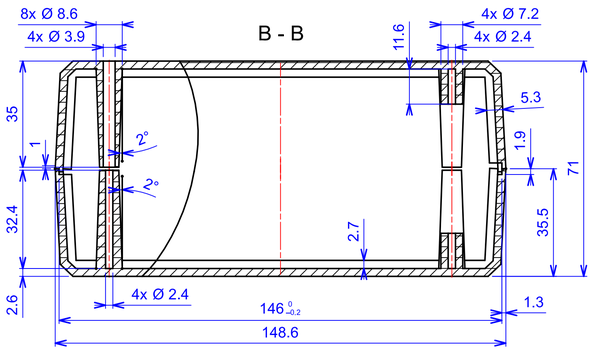
B - B
8x Ø 8.6
4x Ø 3.9
11.6
4x Ø 7.2
4x Ø 2.4
35
1
2°
5.3
1.9
71
32.4
2.7
35.5
2.6
4x Ø 2.4
146
148.6
1.3

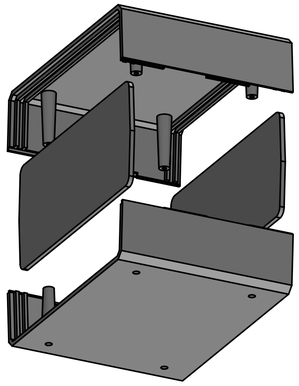

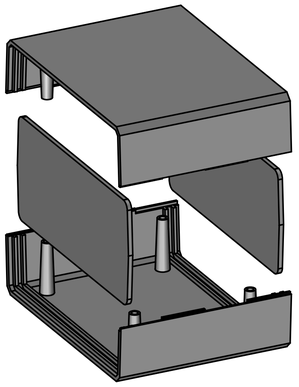

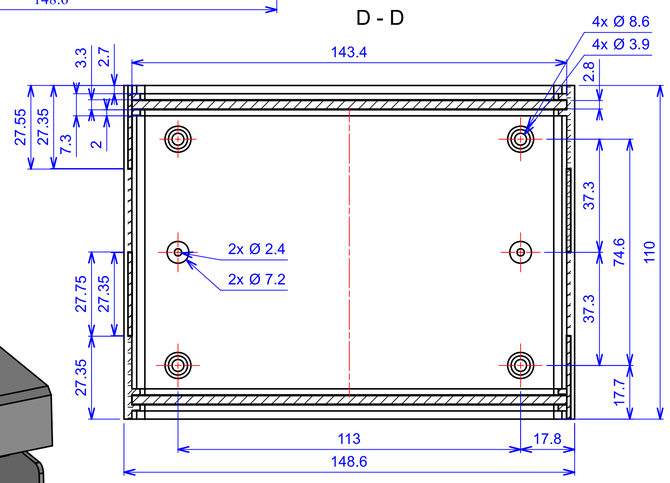
D - D
143.4
4x Ø 8.6
4x Ø 3.9
3.3
2.7
2.8
27.55
27.35
7.3
2
37.3
74.6
110
2x Ø 2.4
2x Ø 7.2
27.75
17.7
113
17.8
148.6

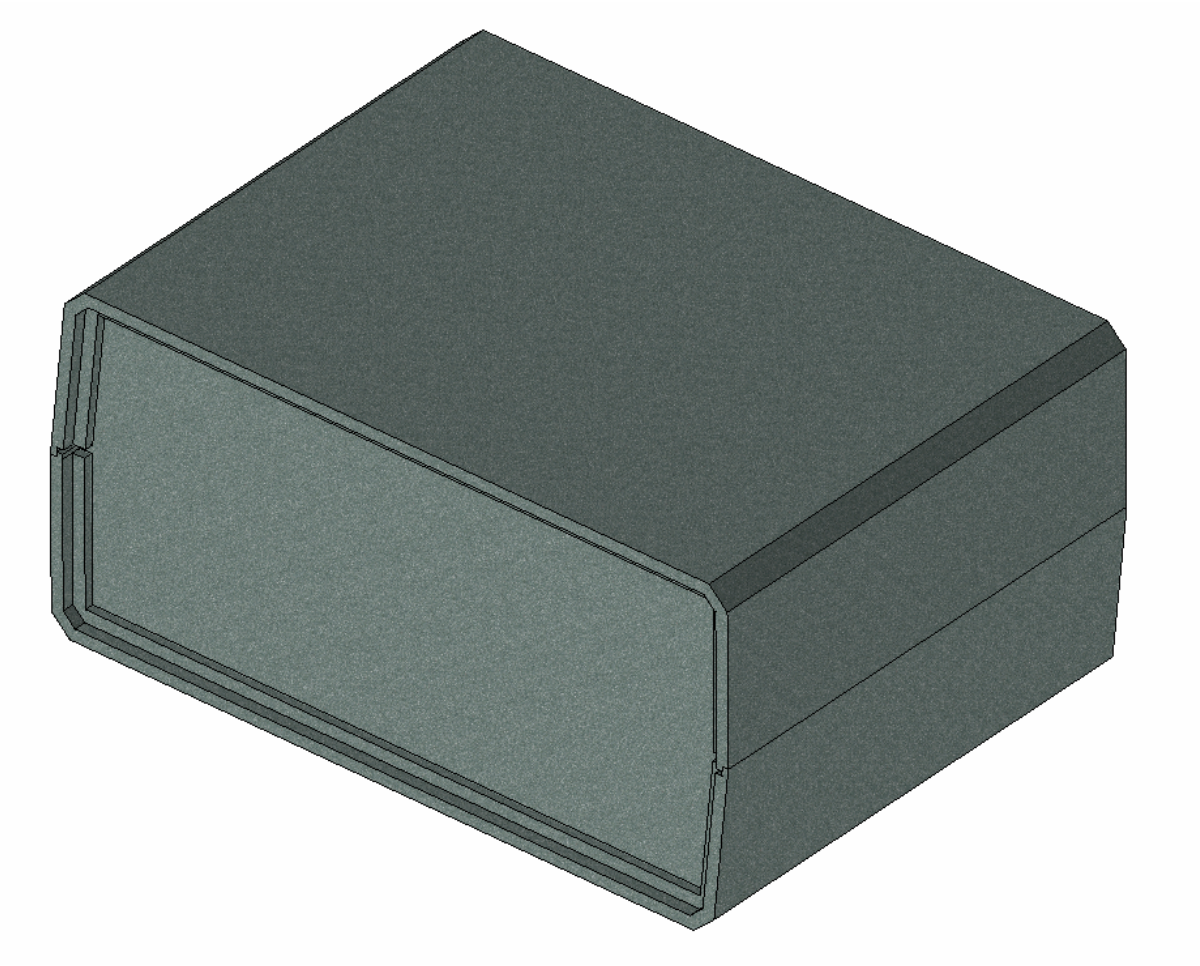

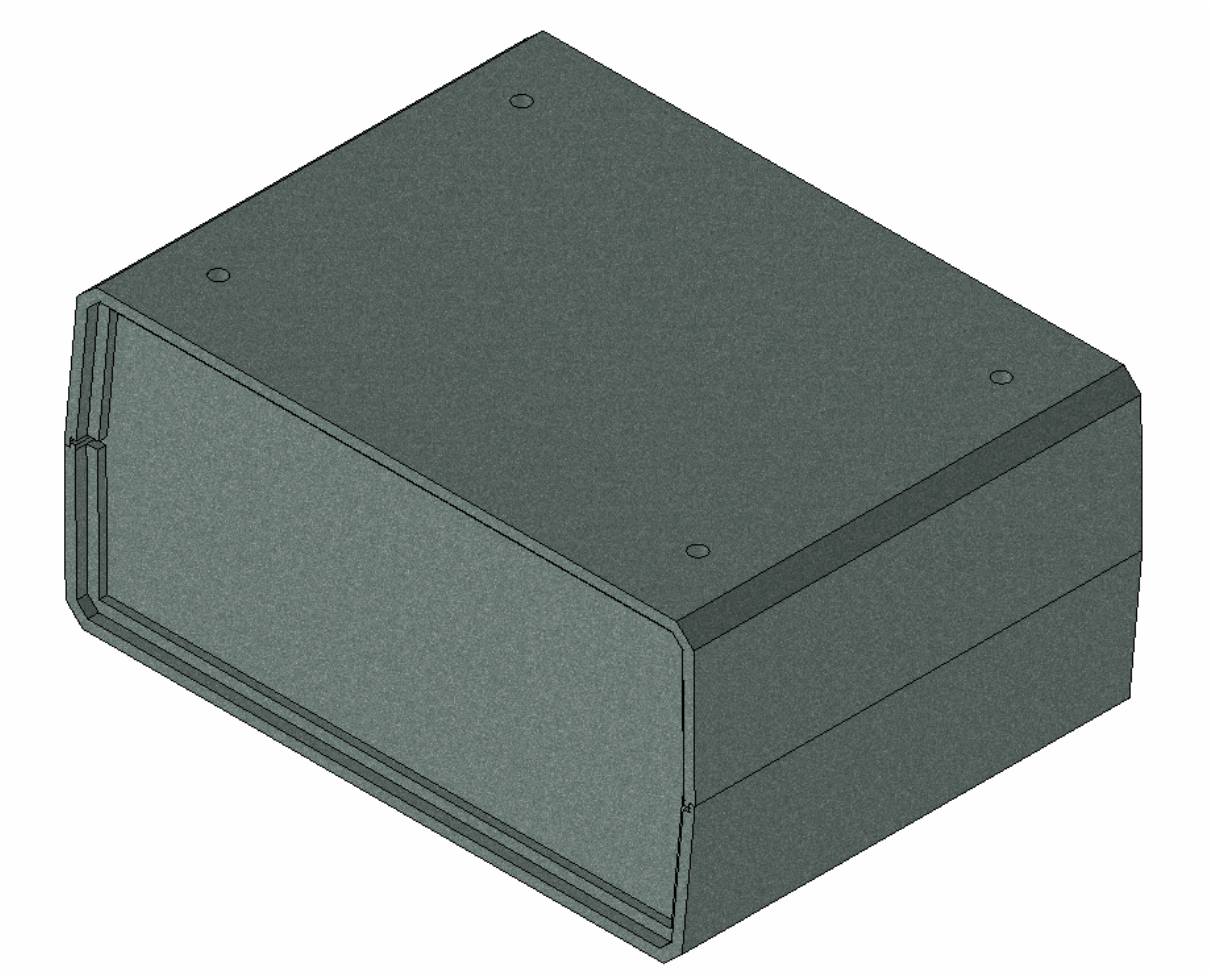

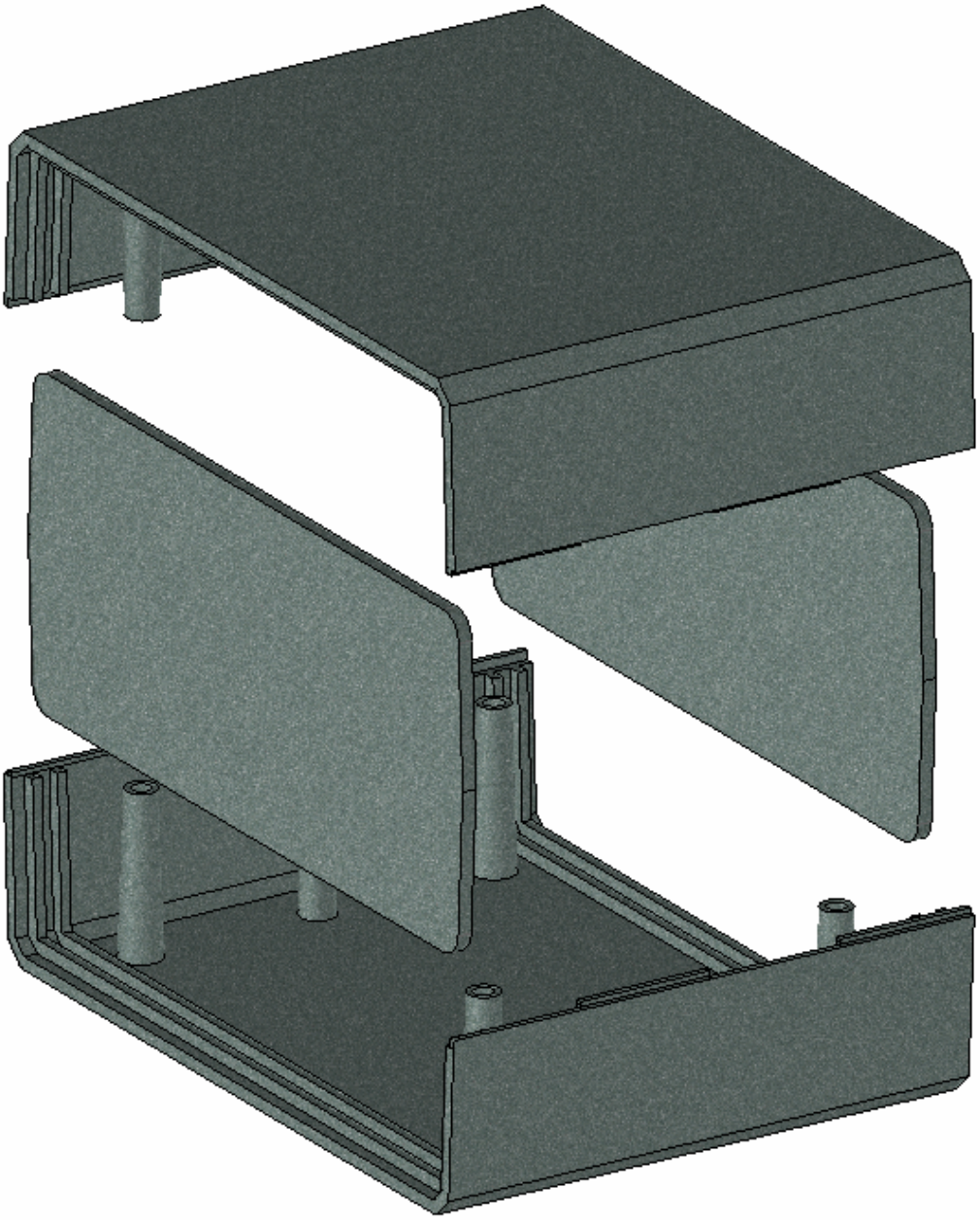

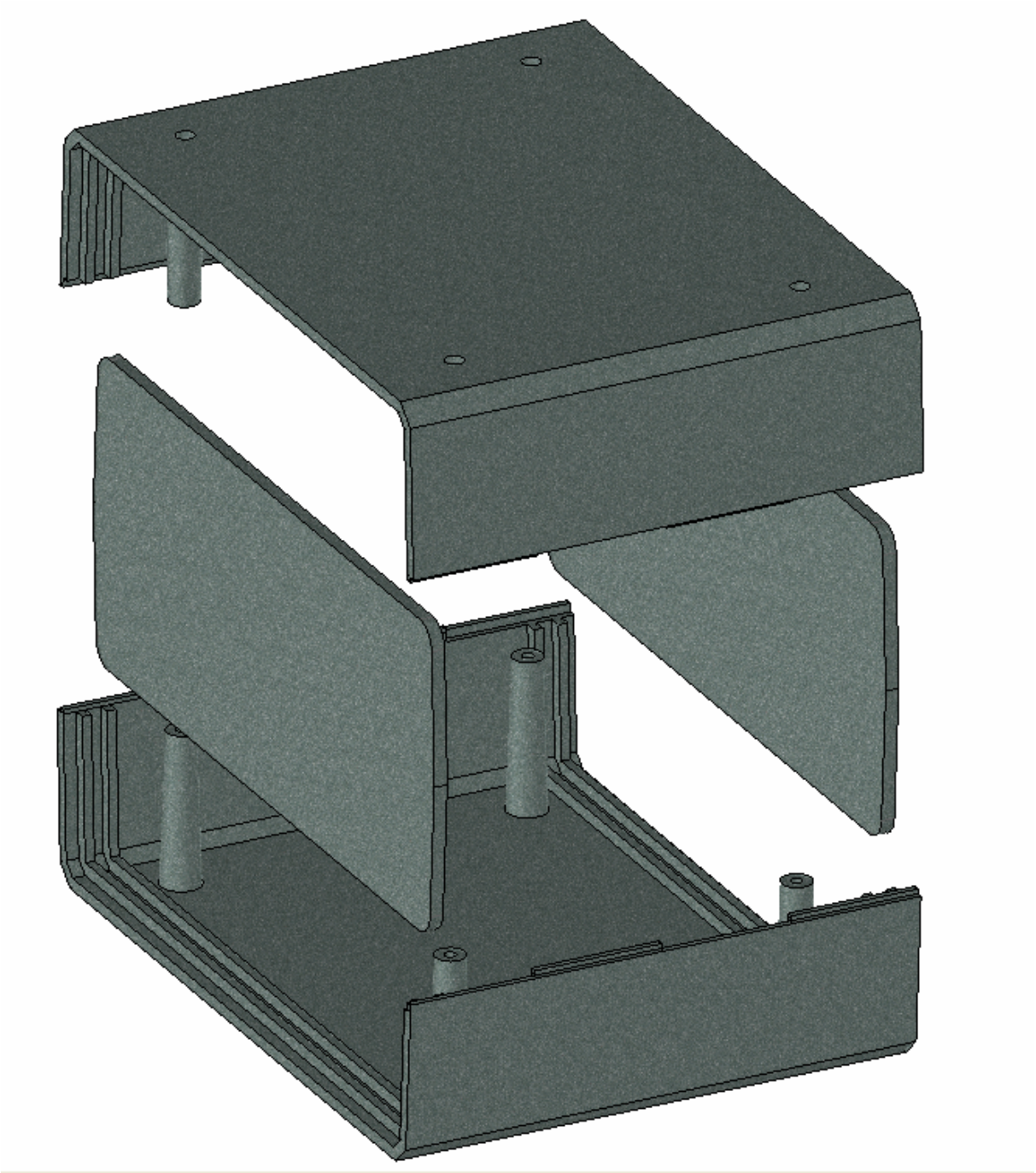

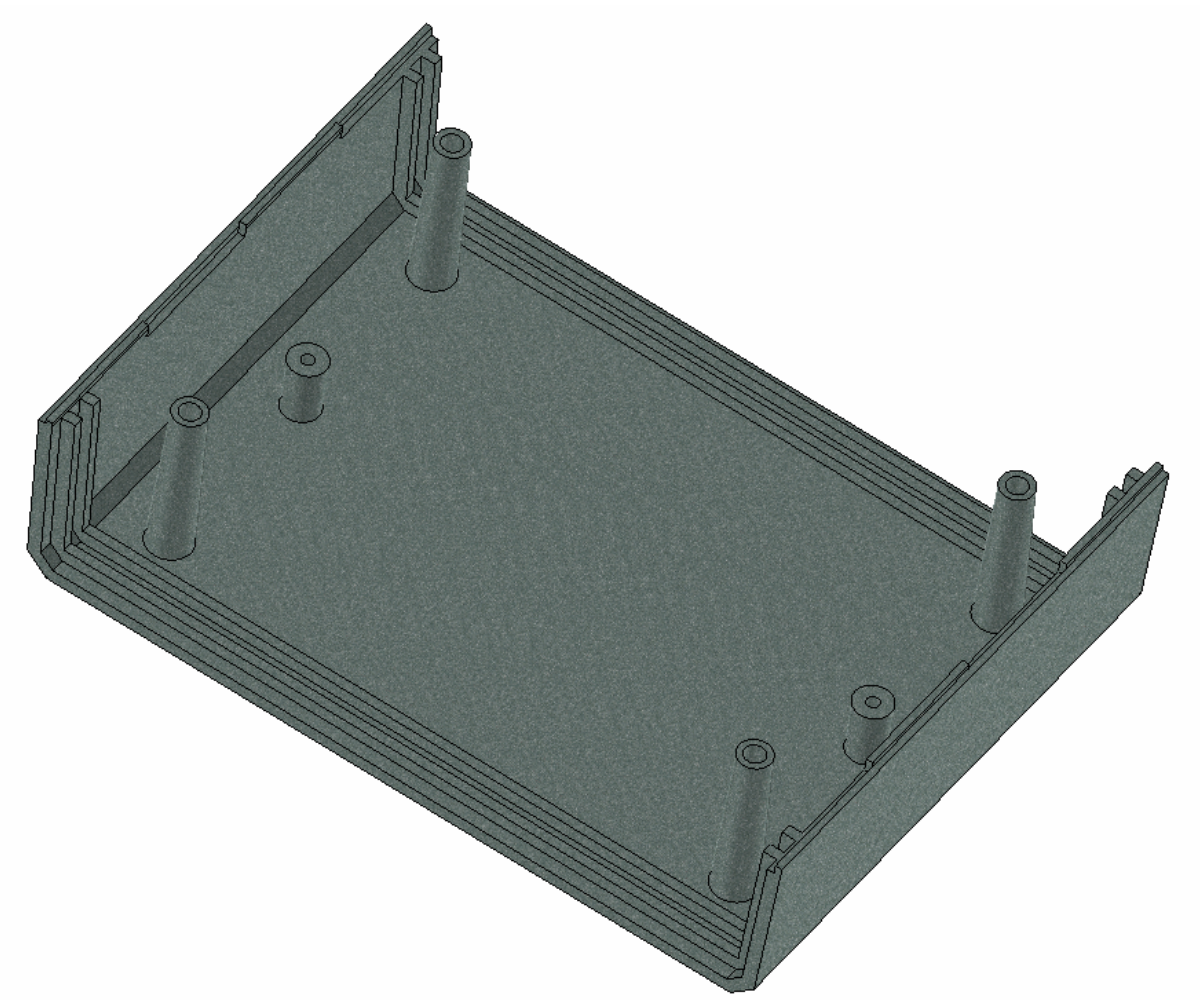

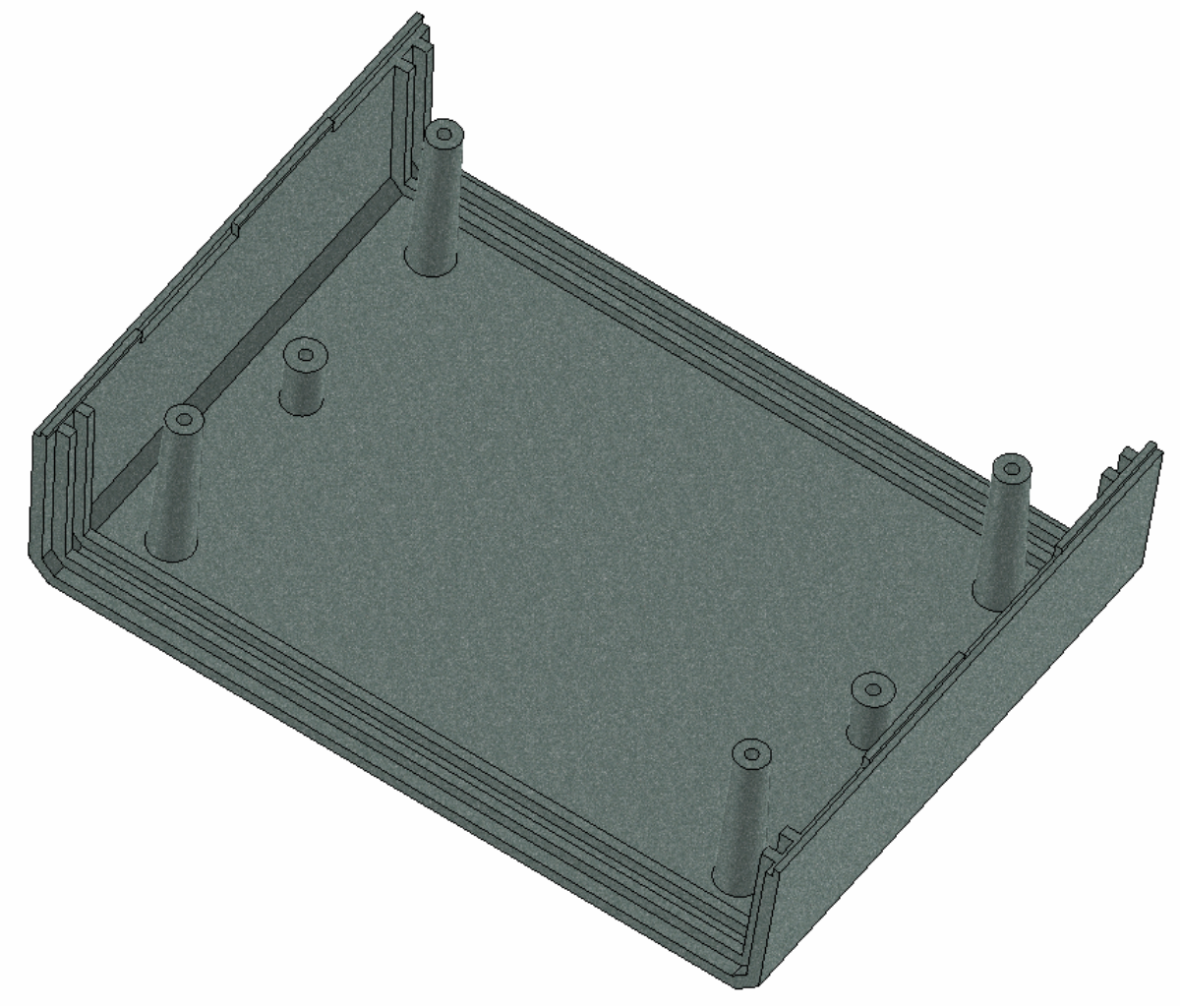

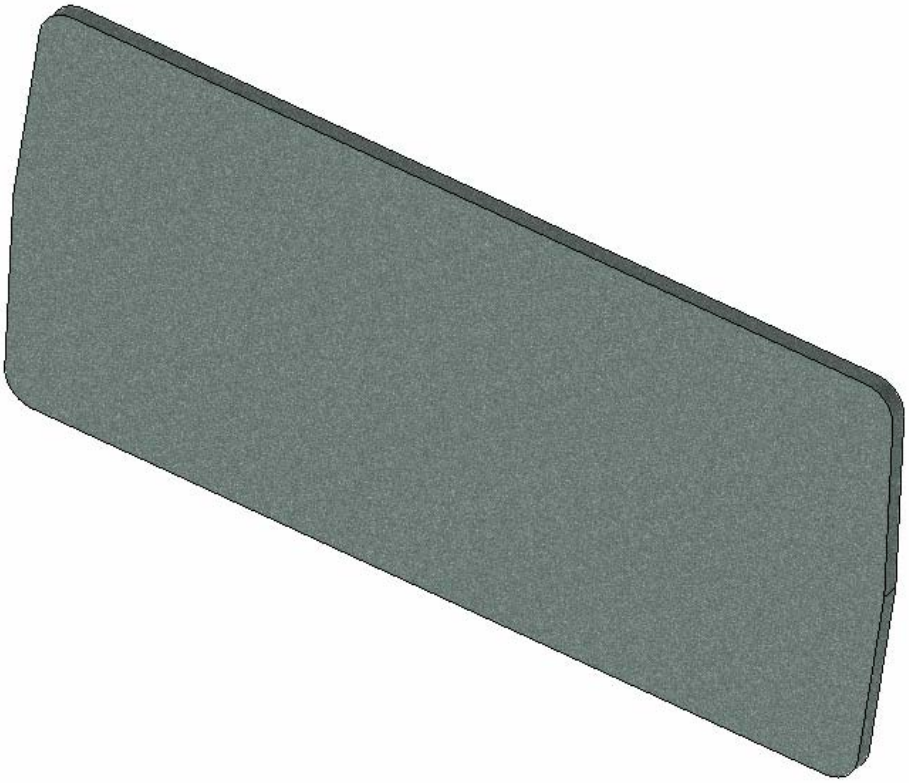

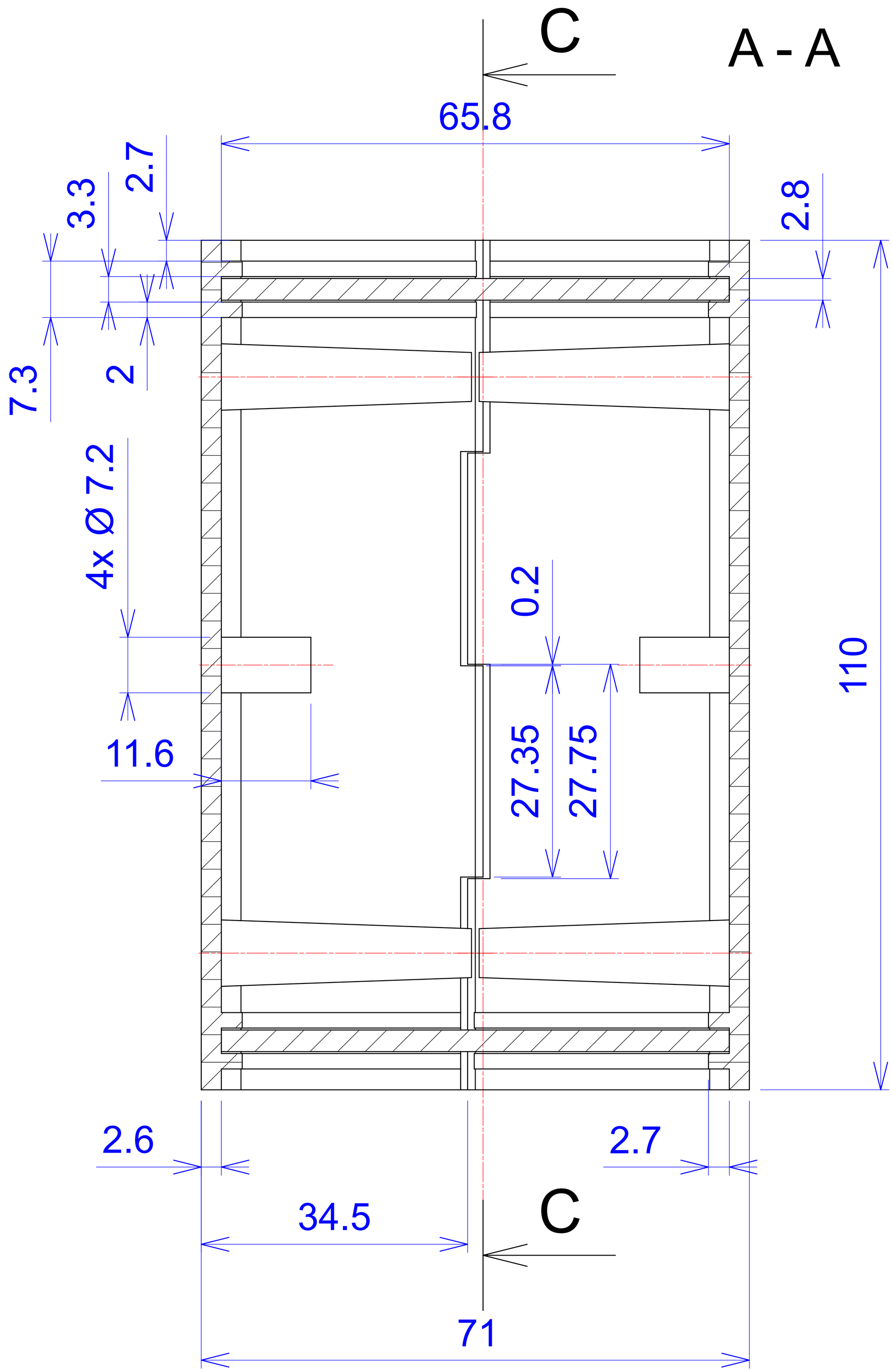
A - A
C
65.8
2.7
3.3
2.8
7.3
2
4x Ø 7.2
0.2
110
11.6
27.35
27.75
2.6
2.7
34.5
C
71

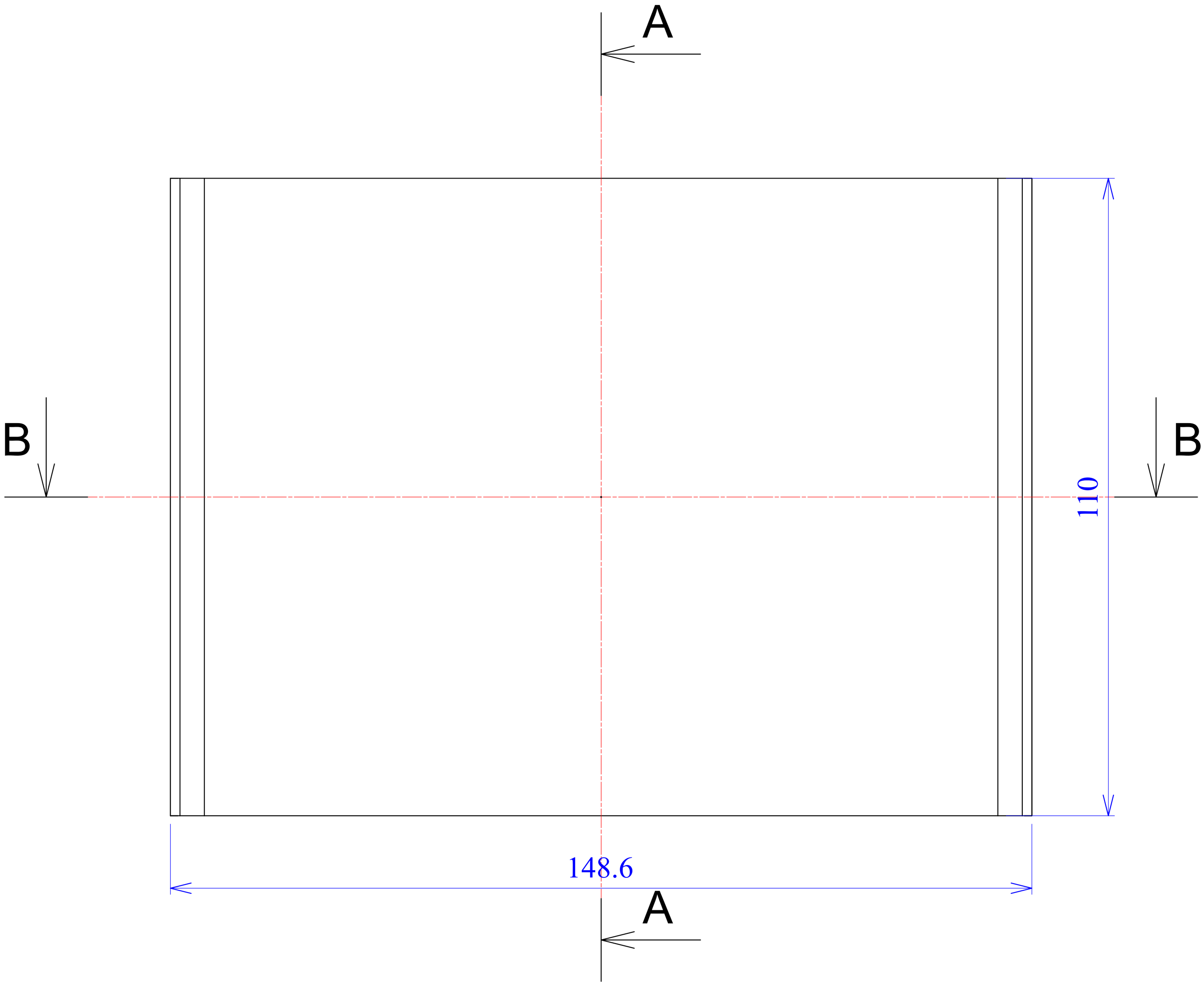
A
B
B
110
148.6
A

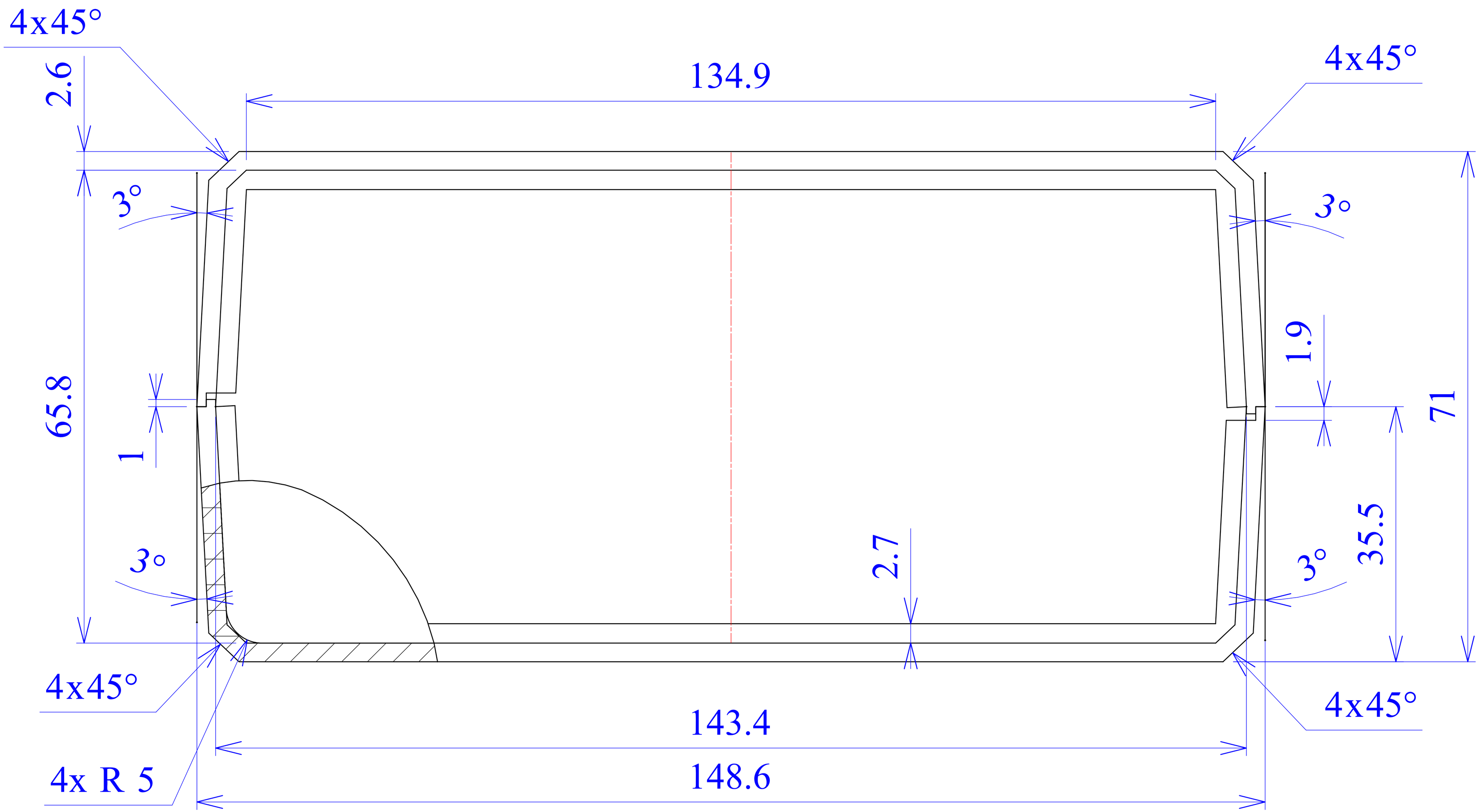
4x45°
2.6
134.9
4x45°
3°
3°
65.8
1
1.9
71
35.5
3°
3°
2.7
4x45°
4x45°
143.4
4x R 5
148.6

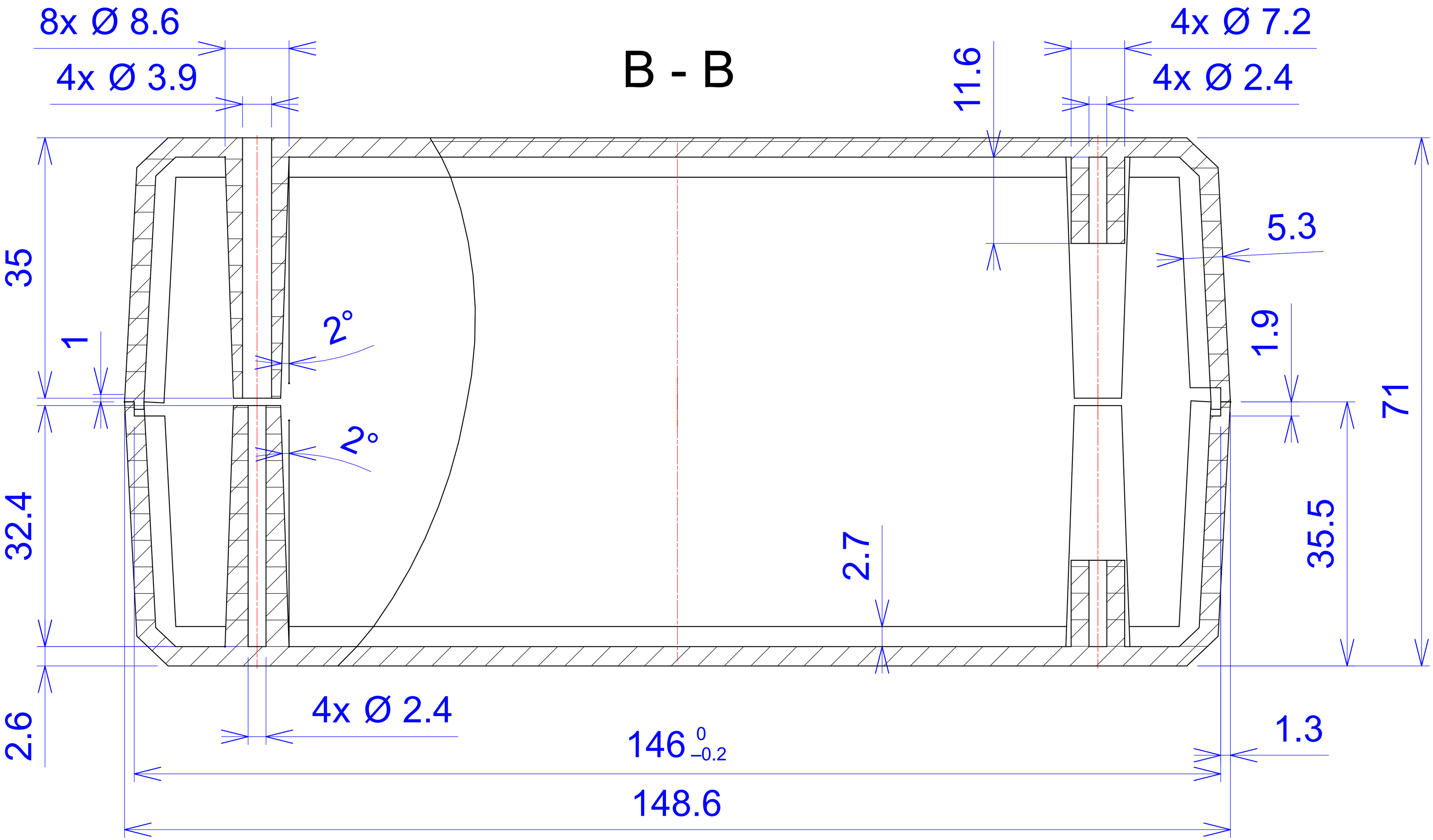
B - B
8x Ø 8.6
4x Ø 3.9
4x Ø 7.2
4x Ø 2.4
11.6
5.3
1.9
71
35.5
35
1
2°
2°
32.4
2.7
2.6
4x Ø 2.4
146 0 −0.2
1.3
148.6

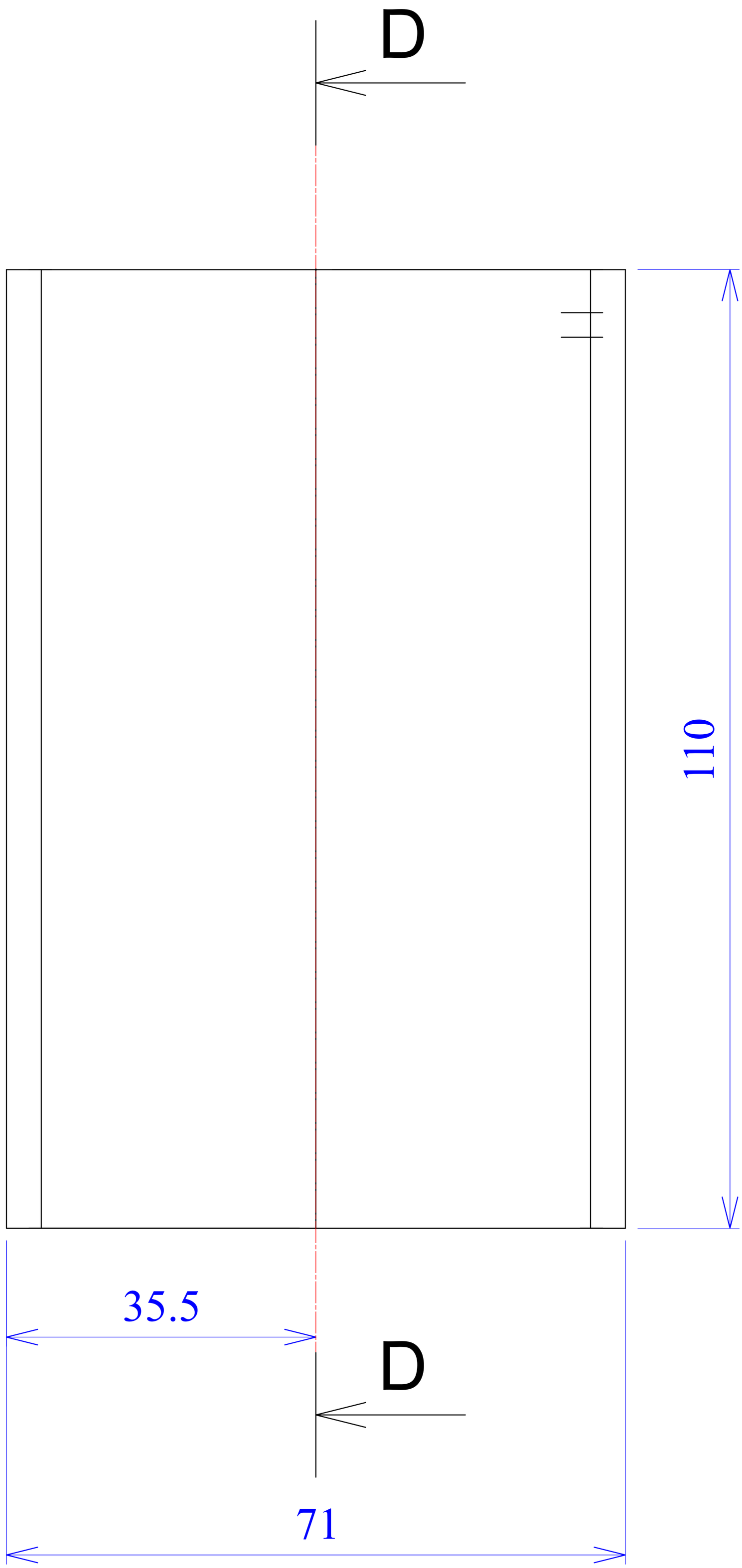
D
110
35.5
D
71

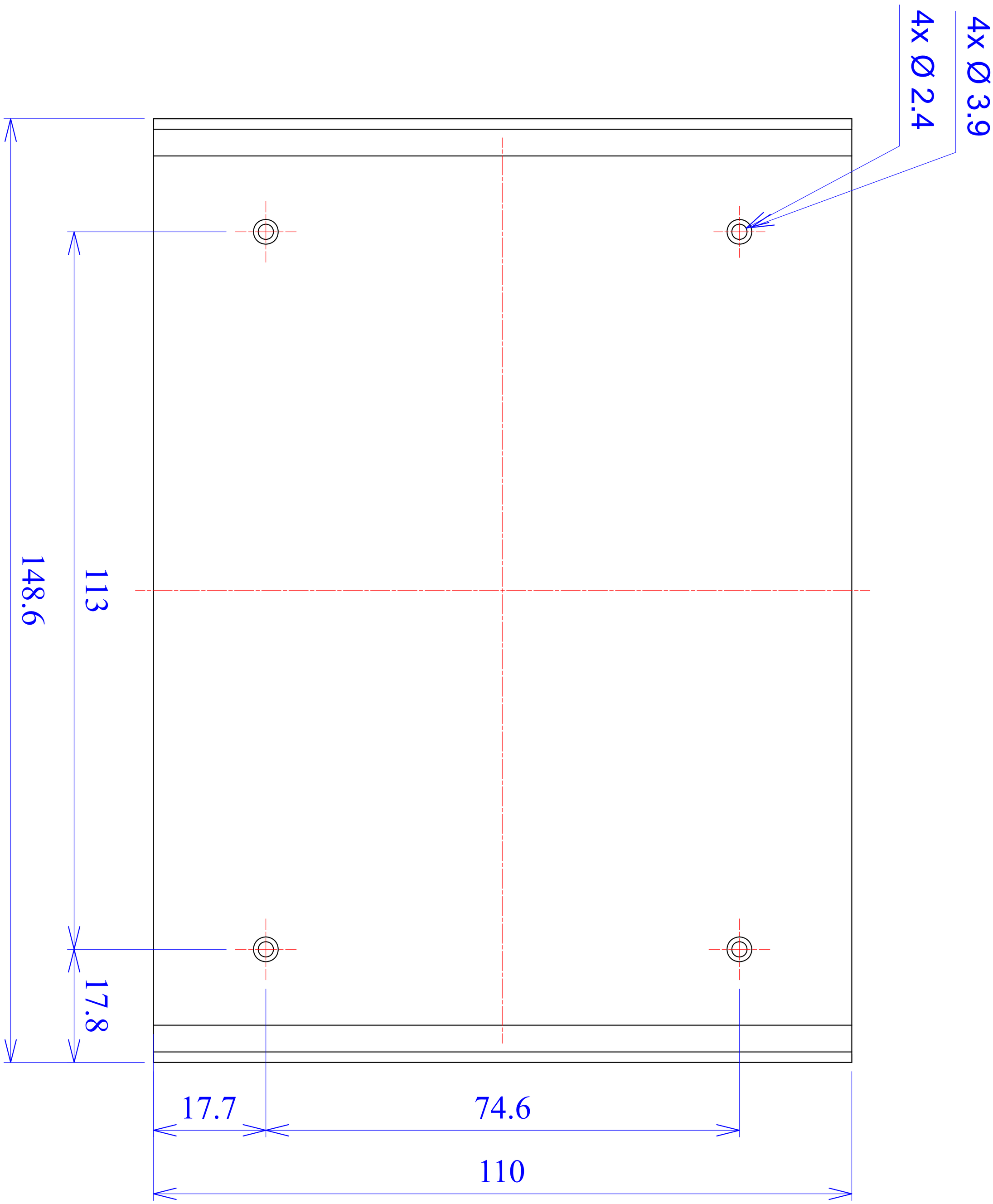
4x Ø 3.9
4x Ø 2.4
148.6
113
17.8
17.7
74.6
110

# C - C

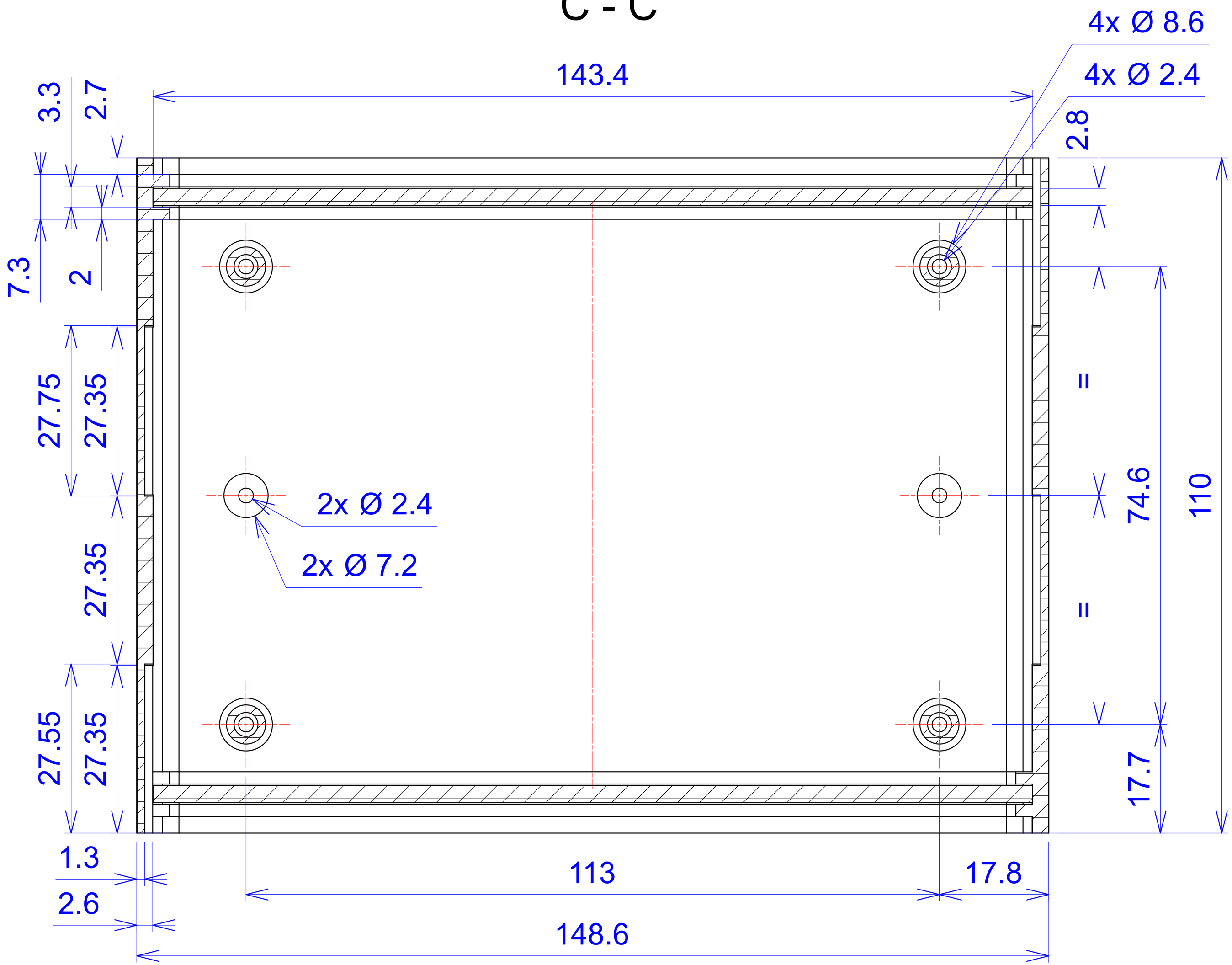
4x Ø 8.6
4x Ø 2.4
143.4
3.3
2.7
2.8
7.3
2
27.75
27.35
=
74.6
110
2x Ø 2.4
2x Ø 7.2
27.35
=
27.55
27.35
17.7
1.3
2.6
113
17.8
148.6

# D - D

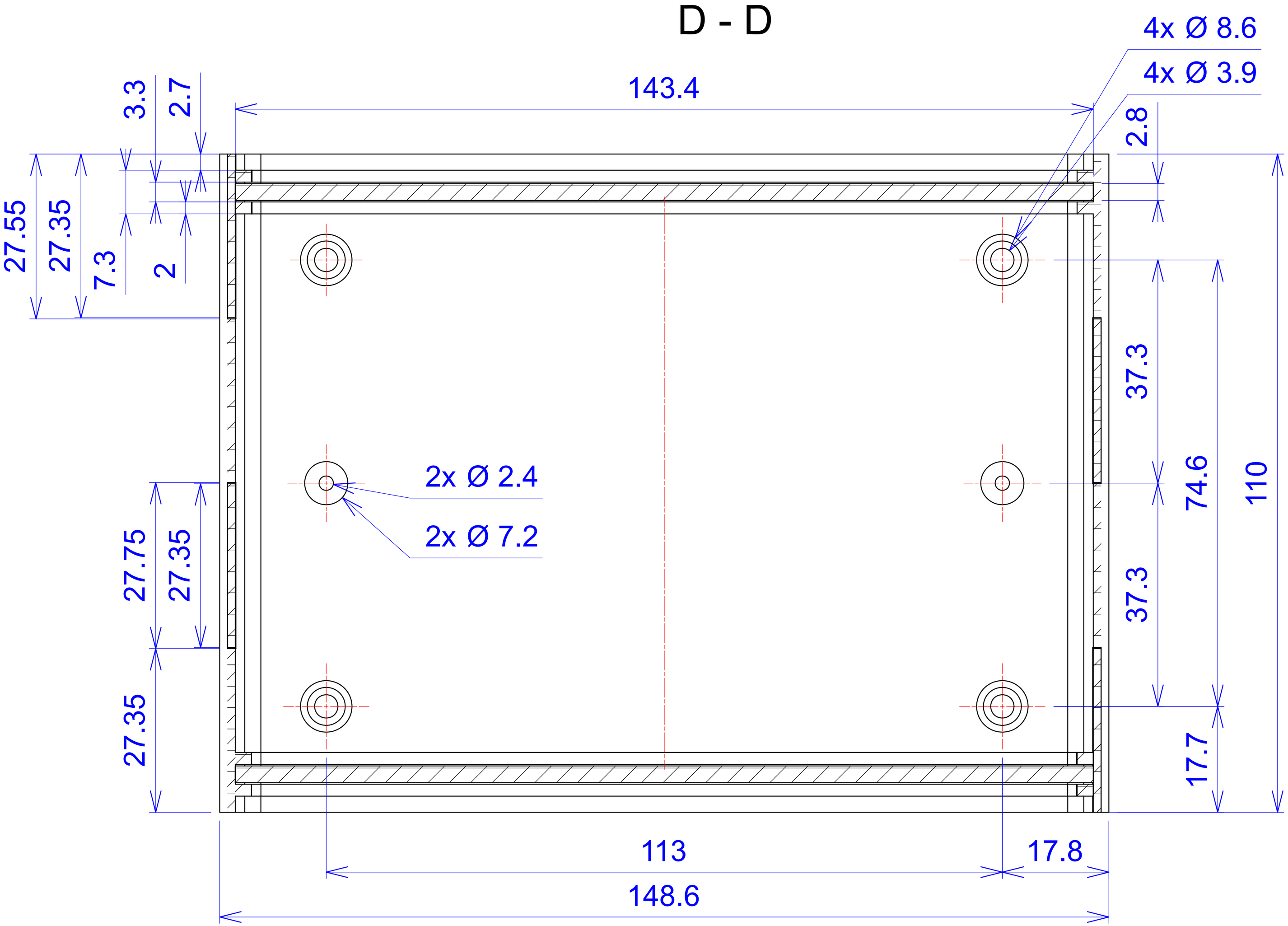
4x Ø 8.6
4x Ø 3.9
143.4
3.3
2.7
2.8
27.55
27.35
7.3
2
37.3
74.6
110
2x Ø 2.4
2x Ø 7.2
27.75
27.35
37.3
27.35
17.7
113
17.8
148.6