Table of Content

The Statement..... 1

Safety Statement..... 1

Safety Instructions..... 2

Safety Operation Specifications..... 2

Safety Symbols 4

Overview..... 6

LCD Display..... 6

Buttons..... 8

Rotary Switch..... 9

Input Socket..... 10

At the Top.....11

Measurement Operation.....11

Manual and Automatic Range 11

Measure AC Voltage..... 1

Measure DC Voltage..... 1

Measure Frequency and Duty..... 15

Measure AC or DC Current 16

Measure Resistance..... 1

Measure Connectivity..... 1

Measure Capacitance 1

Measure Diode..... 21

Measure Temperature..... 22

Measure Humidity 24

Measure Illuminance 25

Measure Noise 25

Auto Power-off Function 26

Backlight Function 26

Data Hold 27

General Technical Specifications 28

Accuracy Specifications 30

DC Voltage 30

AC Voltage 31

DC Current 31

AC Current 32

Resistance 32

Connectivity Test 33

Capacitance 33

Frequency and Duty..... 34

Diode Test..... 35

Noise(dB) 35

Illuminance(Lux) 35

Humidity(RH, shown in humidity display area) 35

Temperature..... 36

Maintenance 37

General..... 37

Replace Battery and Fuse..... 37

The Statement

In accordance with the international copyright law, without permission and written consent, do not copy the contents of this manual in any form (including storage and retrieval or translation into languages of other countries or regions). The manual is subject to change in future edition without prior notice.

Safety Statement

Caution

"**Caution**" mark refers to the condition and operation which may cause damage to the instrument or equipment.

It requires that you must be careful during the execution of the operation. If incorrectly perform the operation or do not follow the procedure, it may damage the instrument or equipment. In the circumstances that such conditions are not met or not fully understood, please do not continue to perform any operation indicated by the caution mark.

Warning

"**Warning**" mark indicates the condition and operation which may cause danger to users.

It requires that you must pay attention during the execution of this operation. If incorrectly perform the operation or do not follow the procedure, it may result in personal injury or casualties. In the circumstances that such conditions are not met or not fully understood, please do not continue to perform any operation indicated by the warning mark.

Before using the instrument, please read this manual carefully and pay attention to the relevant safety warning information.

Safety Instructions

The instrument is designed in accordance with the safety requirements on electronic measurement instruments in International Electrical Safety Standards **IEC61010**. The instrument is designed and manufactured strictly in accordance with provisions in **IEC61010-1 CAT.III/1000V**, over-voltage safety standard **CAT.IV/600V**and pollution level **2**.

Safety Operation Specifications

Warning: In order to avoid possible electric shock or peronal injury and other safety accidents, please abide by the following specifications:

- Before using the instrument, please read this manual carefully, and pay attention to the safety warning information.
- Check whether there are any cracks or damage on the plastic parts of the outer cabinet before using the instrument, if any, please do not use it.
- Before using the instrument, please check whether the instrument works properly, if it’s not or it has been damaged, please do not use.

- Before using the instrument, please carefully check the insulator around the input terminals of the instrument, please do not use if any damage.
- Before using the instrument, please check whether there's any crack or damage on the probe, if any, please replace the probe with same specifications.
- Before using the instrument, please check whether there's any damage, metal exposed or sign of wear on the insulating layer of the probe, check the connectivity of the probe, if any damage, please do not use.
- Before using the instrument, please use it to measure a known voltage to verify whether the instrument works properly.
- Use the instrument strictly in accordance with the operation in the manual, otherwise the protection function provided by the instrument may be damaged or weakened.
- The instrument shall be used in accordance with the specified measurement category, voltage or current rating.
- Please comply with local and national safety code. Wear personal protection equipment (such as approved rubber gloves, masks and flame retardant clothes, etc.) to prevent being damaged by electric shock and electric arc due to exposed hazardous live conductor.
- Before connecting the instrument to the circuit under test, be sure to choose the correct input terminal and switch position.
- The voltage applied between input terminals or between any terminal and earth point cannot exceed the specified ratings of the instrument.

- Please be careful if the measurement exceeds 30V AC true RMS, 42V AC peak or 60V DC. There may be danger of electric shock at this kind of voltage.
- When it shows low battery indicator, please replace the battery in time in case of any measurement error.
- Do not use the instrument around explosive gas, steam or in wet environment.
- When using the probe, please put your fingers behind the finger protector of the probe.
- When measuring, please connect the zero line or the ground line firstly, then connect the live wire; but when disconnecting, please disconnect the live wire firstly, then disconnect the zero line and ground line.
- Before opening the outer cabinet or battery cover, please remove the probe on the instrument. Do not use the instrument in the circumstances that the instrument is taken apart or battery cover is opened.
- It only meets the safety standards when the instrument is used together with the supplied probe. If the probe is damaged and needs to replace, the probe with same model number and same electrical specifications must be used for replacement.

Safety Symbols

ϟ	High voltage warning
~	AC (Alternating current)

	DC (Direct current)
	AC or DC
	Warning, important safety signs
	Ground
	Fuse
	Equipment with double insulation or reinforced insulation protection
	Battery undervoltage
CE	Product complies with all relevant European laws
	The additional product label shows that do not discard this electrical/electronic product into household garbage.
CAT. III 1000V	CAT III 1000 V over-voltage protection
CAT. IV 600V	CAT IV 600 V over-voltage protection

Overview

The instrument is a hand-held intelligent multifunctional measurement instrument, integrating noise, illuminance, humidity, temperature and digital multimeter into one. With large LCD digital display (three sets of data display) and backlight, it's easy for user to read, with overload protection and battery undervoltage indication. Whether for professionals, factories, schools, amateurs or family, it's an ideal multi-functional instrument.

LCD Display

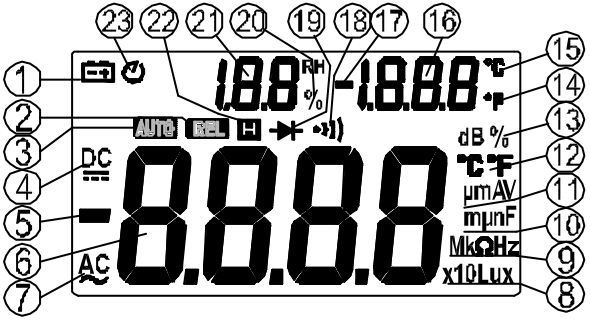

	Noise or duty ratio unit
	Normal temperature display unit, Fahrenheit
	Normal temperature display unit, centigrade
	Temperature display area
	Normal temperature display minus
	Connectivity measurement indicator

					Diode test indicator
					Humidity unit
	Battery undervoltage indicator		AC voltage or current indicator		Humidity display area
	Relative value measurement indicator		Illuminance unit		Data hold indicator
	Automatic range indicator		Resistance or frequency unit		Auto power-off indicator
	DC voltage or current indicator		Capacitance unit		
	Minus		Voltage or current unit		
	Main display area		Temperature unit		

Buttons

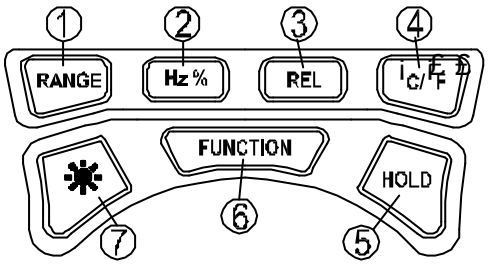

✂	**RANGE**: switch between automatic range and manual range
✂	**Hz%**: switch between frequency and duty ratio
	REL: relative value measurement
	°C/°F: switch between centigrade and Fahrenheit
	HOLD: data hold
	FUNCTION: switch among function selections
☎	☀ backlight

Rotary Switch

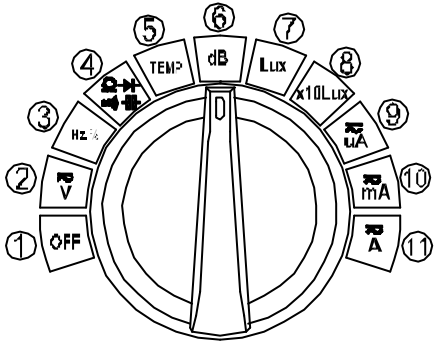

	OFF		AC or DC voltage, press FUNCTION button to switch
	Frequency, duty ratio, press Hz% button to switch		
	Resistance, diode, connectivity, capacitance, press FUNCTION button to switch		
	Temperature measurement, press °C/°F button to switch unit		
	Noise measurement		
	Illuminancemeasurement		
	Illuminance measurement x10 gear, measurement result=displayed value x10		
	AC and DC current microampere measurement, press FUNCTION button to switch		
	AC and DC current milliampere measurement, press FUNCTION button to switch		
	AC and DC current ampere measurement, press FUNCTION button to switch		

Input Socket

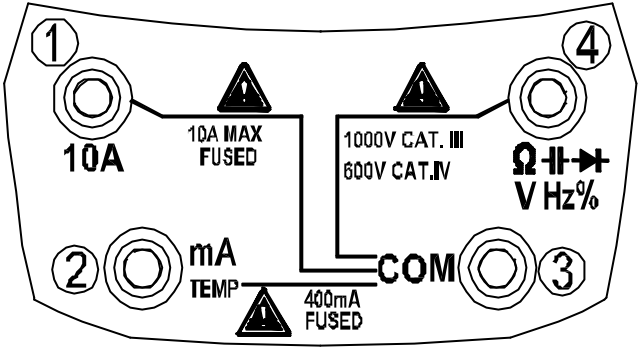

✂	Used for AC and DC current measurement (can measure maximum 10A), input socket for frequency/duty ratio measurement (frequency measurement in current mode).
✂	Used for AC and DC microampere (μA) and milliampere (mA) measurement (can measure maximum 400mA) and input socket for frequency/duty ratio (frequency measurement in current mode); positive input socket of K type thermocouple temperature measurement.
	Used for public terminal of all measurement; negative input socket of K type thermocouple temperature measurement.
	Input socket for voltage, resistance, connectivity, diode, capacitance, frequency, duty ratio measurement.

At the Top

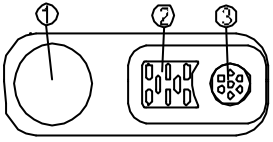		Illuminance induction area, when measuring the illuminance, this area should be vertically aligned to the light source
		Normal temperature and humidity induction area
		Noise induction area, when measuring noise, this area should be aligned to the noise source

Measurement Operation

Manual and Automatic Range

The instrument is equipped with manual and automatic range. In automatic range mode, the instrument will select the best range for the input signal detected, so it is convenient that the user does not need to re-select range when changing the measuring signal. The instrument can also be set to manual range. It is defaulted as automatic range mode after the unit is turned on or function is switched, the instrument displays “AUTO” symbol. The operations of entering or quitting manual range are as follows:

1. In automatic range mode, press button, “AUTO” symbol hides.

2. Press button to increase the range, when reached the maximum range, the instrument will return to the minimum range.

3. Press and hold button for 2 seconds to quit manual range mode, the instrument displays “AUTO” symbol.

Note: for function of frequency, duty ratio, capacitance, diode, connectivity, temperature, noise and illuminance measurement, the button is invalid.

Relative Value Measurement

The instrument is equipped with relative value measurement function. In this mode, the instrument display value=actual value-set reference value. Operations of entering or quitting relative measurement are as follows:

1. Set the instrument to the measurement function you need, contact the probe to the measured object which you want to set as reference value.

2. Press button, set the measured value as reference value, enter the relative measurement mode, the instrument displays “REL” symbol.

3. Measure, the instrument will display “actual value-set reference value”.

4. Press and hold button and quit relative value measurement mode, the “REL” symbol hides.

Note: frequency, duty ratio, diode, connectivity, temperature, noise and illuminance measurement has no relative value measurement mode.

Measure AC Voltage

As shown in the figure on the right, set the instrument to the function of AC voltage measurement, contact the probe to the measured circuit, then read the display value. The steps are as follows:

1. Scroll the rotary knob to $\tilde{V}$, press “FUNCTION” button and switch to AC voltage function.

2. Insert the red probe in “V”, and the black probe in “COM”.

3. Contact the probe to the measured circuit, measure the voltage.

4. Read the measurement result on the screen.

Note1: It can be switched to AC voltage 400mV range only through manual range.

Note2: Press Hz% button to measure the frequency and duty ratio of the AC voltage source, please refer to Measure Frequency.

Warning!

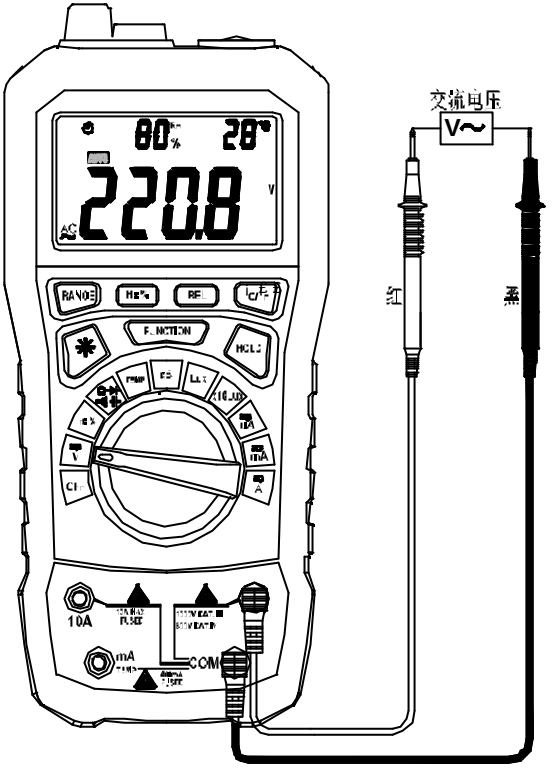

Do not allow measurement of any voltage higher than DC 1000V or AC 750VRMS, otherwise it may cause instrument damage, electric shock or personal injuries.

Do not allow applying voltage exceeding DC 1000V or AC 750V RMS between a public terminal and the earth, otherwise it may cause instrument damage, electric shock or personal injuries.

Measure DC Voltage

As shown in the figure on the right, set the instrument to the function of DC voltage measurement, contact the probe to the measured circuit, then read the display value. The steps are as follows:

1. Scroll the rotary knob to $\overline{\overline{V}}$, press “FUNCTION” button and set to DC voltage function.

2. Insert the red probe in “V”, and the black probe in “COM”.

3. Contact the probe to the measured circuit, and measure the voltage.

4. Read the measurement result on the screen.

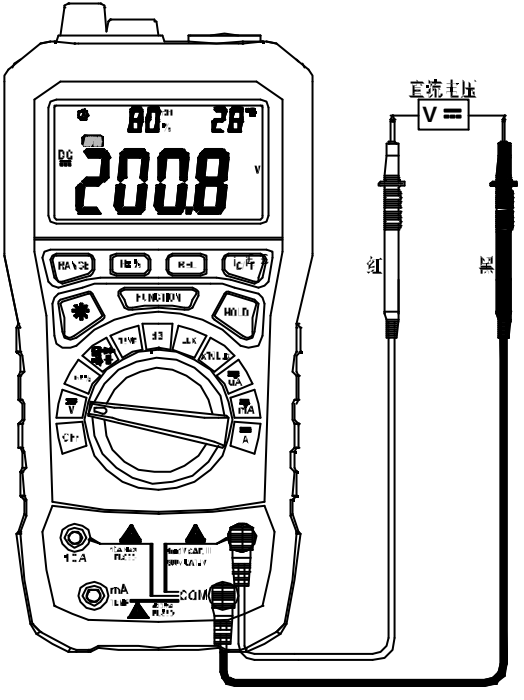

Note: Press Hz% button to measure the frequency and duty ratio of the AC voltage source, please refer to

Measure Frequency.

⚠Warning!

Do not allow measurement of any voltage higher than DC 1000V or AC 750VRMS, otherwise it may cause instrument damage, electric shock or personal injuries.

Do not allow applying voltage exceeding DC 1000V or AC 750V RMS between a public terminal and the earth, otherwise it may cause instrument damage, electric shock or personal injuries.

Measure Frequency and Duty

As shown in the figure on the right, set the instrument to the function of Hz% measurement, contact the probe to the measured circuit, then read the display value. The steps are as follows:

1. Scroll the rotary knob to “Hz%”, press “Hz%” button and switch between frequency and duty. (orin AC voltage or AC current shift frequency and duty can also be measured)
2. Insert the red probe in “V”, and the black probe in “COM”.

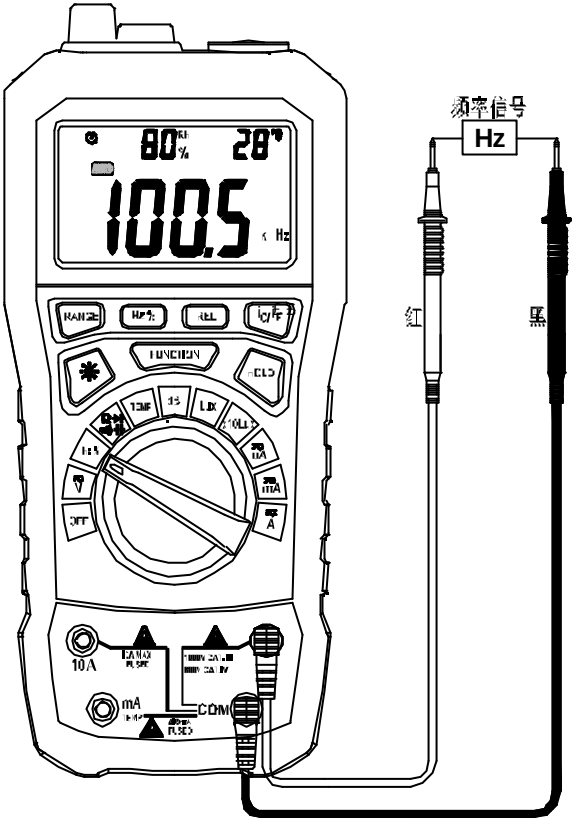

3. Contact the probe to the measured circuit, and measure the frequency.

4. Read the measurement result on the screen.

Note: switch to Hz% shift and voltage or current shift to measure the frequency sensitivity and measurement range, please refer to Frequency accuracy index.

Warning!

Do not allow measurement of any voltage higher than DC 1000V or AC 750VRMS, otherwise it may cause instrument damage, electric shock or personal injuries.

Do not allow applying voltage exceeding DC 1000V or AC 750V RMS between a public terminal and the earth, otherwise it may cause instrument damage, electric shock or personal injuries.

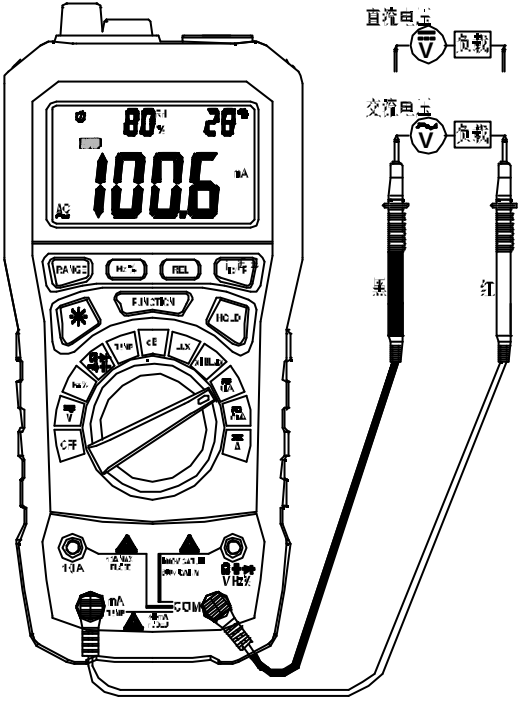

Measure AC or DC Current

As shown in the figure on the right, set the instrument to the function of UA mA A measurement, connect the probe to the measured circuit in series, then read the display value. The steps are as follows:

1. According to the actual current of measurement scroll the

rotary knob to any shift among “uA”, “mA” and “A”, press “FUNCTION” button and switch to AC or DC function.

2. According to the measured current, insert the red probe in “mA” socket or “10A” socket, and the black probe in “COM” socket.

3. Disconnect the power supply of the measured circuit, connect the probe to the measured circuit in series, and turn on the power supply of the measured circuit.

4. Read the measurement result on the screen.

Note: Press Hz% button to measure the frequency and duty ratio of the AC current source, please refer to Measure Frequency.

Warning!

Do not allow measurement of any voltage higher than DC 1000V or AC 750V RMS, otherwise it may cause instrument damage, electric shock or personal injuries.

Before connect the instrument to the measured circuit in series, the power supply of the measured circuit must be switched off firstly, otherwise it may cause electric shock or personal injuries.

Caution

To avoid any damage on the instrument or equipment, please check whether the fuse is damaged before measurement, and use correct input socket.

Measure Resistance

As shown in the figure on the right, set the instrument to the function of measurement, contact the probe to the measured circuit, then read the display value. The steps are as follows:

1. Scroll the rotary knob to “ ”, press “FUNCTION” button and switch to resistance measurement function.

2. Insert the red probe in “O” socket, and the black probe in “COM” socket.

3. Contact the probe to the measured circuit or both ends of the resistor.

4. Read the measurement result on the screen.

Warning!

Before measuring resistance, connectivity, capacitance or diode, please turn off the power supply and discharge all the high voltage capacitors, otherwise it may cause instrument damage, electric shock or personal injuries.

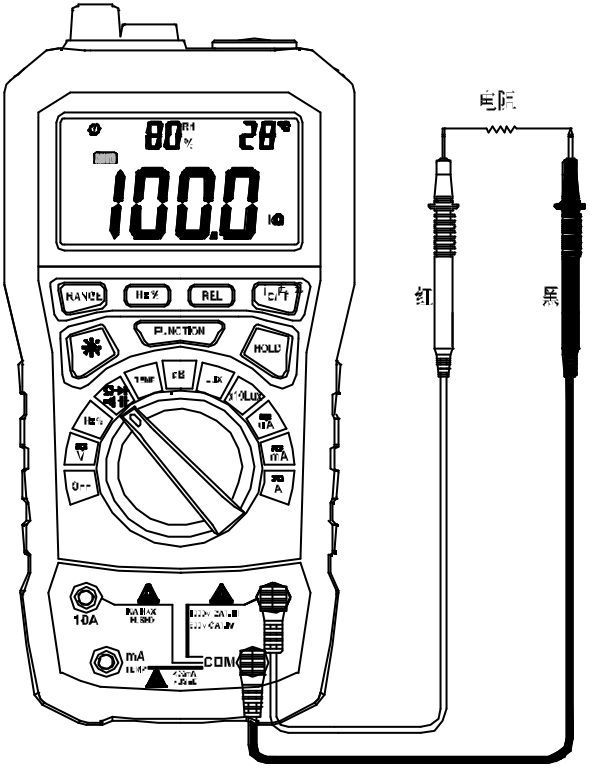

Measure Connectivity

As shown in the figure on the right, set the instrument to the function of measurement, contact the probe to the measured circuit, then read the display value. The steps are as follows:

1. Scroll rotary knob to “ ”, press “FUNCTION” button and switch to connectivity measurement function.

2. Insert the red probe in “O” socket, and the black probe in “COM” socket.

3. Contact the probe to the measured circuit or both ends of the resistor.

4. If the resistance of the measured resistance or circuit is lower than 50O, the buzzer will sound.

Warning!

Before measuring resistance, connectivity, capacitance or diode, please turn off the power supply and discharge all the high voltage capacitors, otherwise it may cause instrument damage, electric shock or personal injuries.

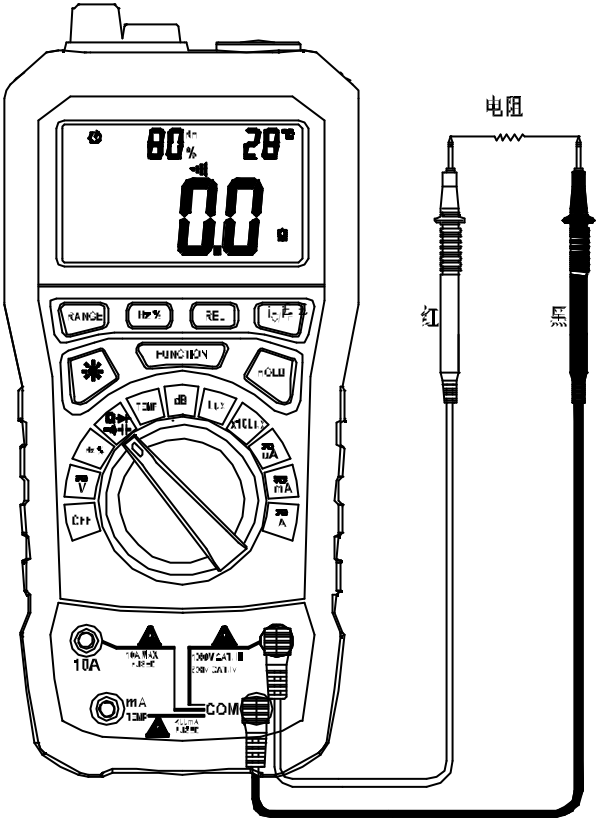

Measure Capacitance

As shown in the figure on the right, set the instrument to the function of measurement, contact the probe to the measured capacitor, then read the display value. The steps are as follows:

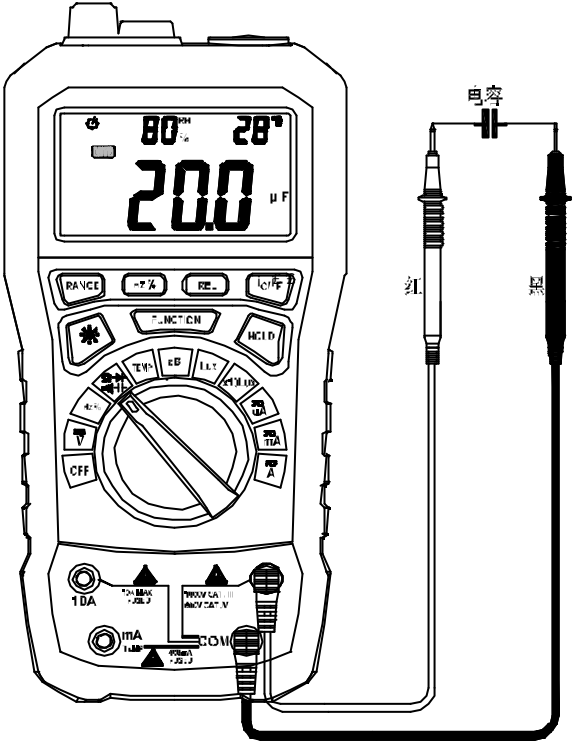

1. Scroll the rotary knob to “ ”, press “FUNCTION” button and switch to capacitance measurement function.

2. Insert the red probe in “ ” socket, and the black probe in “COM” socket

3. Contact the probe to both ends of the capacitor.

4. Read the measurement result on the screen.

Warning!

Before measuring resistance, connectivity, capacitance or diode, please turn off the power supply and discharge all the high voltage capacitors, otherwise it may cause instrument damage, electric shock or personal injuries.

Note:

1. In the circumstance that the input is open circuit, the instrument may display reading, press "REL" button to make it back to zero and measure again.

2. When measuring small capacitance (below 100nF), you'd better enable the relative value measurement function to reduce the measurement error brought by the base number of the probe or instrument.

3. When measuring big capacitance it may takea certain period of time to get stable reading (for example, 100μF takes about 30 seconds).

Measure Diode

As shown in the figure on the right, set the instrument to the function of measurement, contact the probe to the measured capacitor, then read the display value. The steps are as follows:

1. Scroll the rotary knob to "", press "FUNCTION" button and switch to diode measurement function.

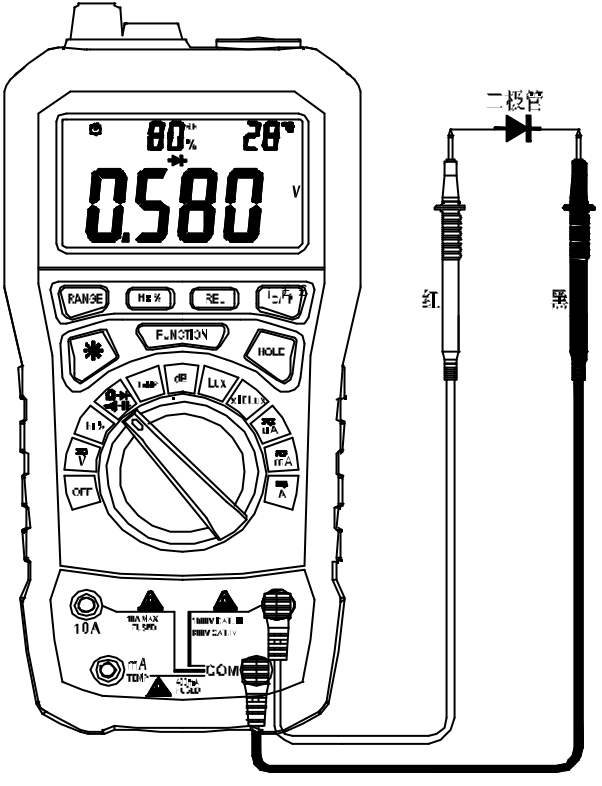

2. Insert the red probe in “” socket, and the black probe in “COM” socket.

3. Contact the red probe to the anode of the measured diode, and the black probe to the cathode of the measured diode.

4. Read the measurement results on the screen.

Warning!

Before measuring resistance, connectivity, capacitance or diode, please turn off the power supply and discharge all the high voltage capacitors, otherwise it may cause instrument damage, electric shock or personal injuries.

Note:

A typical diode forward bias is in the range from 0.3V to 0.8V; however, readings may be different due to the different resistances of other paths between the probes.

Measure Temperature

Measure normal temperature:

The instrument is equipped with normal temperature measurement, only turn on the power supply of the instrument (all the shifts except OFF),it will display the temperature of current environment in normal temperature display area; to measure normal temperature you only need to place the instrument in the measurement environment.

Note:

1. The temperature sensor of the normal temperature is placed on the top end of the instrument. It takes longer time to reach thermal equilibrium with the measurement environment. So when measuring the ambient temperature, it should be placed in the measurement environment for a longer time to obtain more accurate readings.

2. The instrument is not suitable for environment of fast-changing temperatures.

3. Because the temperature sensor used for normal temperature measure ment is placed inside of the instrument, so it can only measure 0~40? environment temperature for normal temperature measurement function.

Caution:

It's possible that the instrument may display temperature out of the range of 0~40? , but it cannot ensure the accuracy of measurement and may also damage the instrument.

Measure temperature by thermocouple:

1. Scroll the rotary knob to "TEMP".

2. Insert the thermocouple into the input socket of the instrument, the positive end of the thermocouple (red color) into "mA" socket, and the negative end (black color) into "COM" socket.

3. Contact the probe of the thermocouple to the measured object, read the result from the main display area on the screen.

4. Press “°C/°F” button, switch between centigrade and Fahrenheit unit.

⚠Warning!

When measuring temperature by thermocouple, the probe of the thermocouple cannot contact the charged object, otherwise it may cause instrument damage, electric shock or personal injuries.

Caution:

The cold junction compensation of the thermocouple is set in the instrument, and it takes longer time to reach thermal balance with the measurement environment. Therefore when measuring, it needs to be placed in the measurement environment for a longer time to obtain more accurate readings.

Measure Humidity

Put the instrument in the environment of measurement, turn on the power supply of the instrument, it shows current environment humidity in the humidity display area.

Note:

1. Put the humidity sensor inside of the top end of the instrument. It takes longer time to ahieve a balance with the measurement environment. So it has to be placed in the measurement environment for a longer time to obtain more accurate reading.

2. The instrument is unsuitable for measurement of environment with fast-changing humidity.

Measure Illuminance

1. Scroll the rotary knob of the instrument to L_{UX} or x10L_{UX}.

2. The illuminance induction area at the top of the instrument should be vertically aligned with the light source to be measured.

3. Read the measurement results on the screen.

Note:

When measuring the illuminance, it is required that the minimum distance between the light emitting surface and the illumiance induction area of the instrument should be larger than 15 times of the maximum dimension of the light emitting surface.

Measure Noise

1. Scroll the rotary knob of the instrument to dB.

2. Make the noise reception area at the top of the instrument face the sound source to be measured.

3. Read the measurement results on the screen.

Note:

Because strong wind (exceeding 10m/sec) will affect the microphone and lead to reading error, so when measuring in strong wind, please put a windshield in front of the microphone.

Auto Power-off Function

- If there's no any operation within 10 minutes after the unit is turned on, the instrument will enter the sleep state to save the battery power.
- After power off automatically, press "✱" to wake up the instrument. The instrument returns to work.
- If press "°C/°F" button to turn on the unit and cancel auto power-off function; to recover the auto power-off function, just restart the unit.

Backlight Function

The instrument is equipped with backlight function for the convenience that the user accurately read the measurement results in places with bad lighting conditions. Operations of turning on or off the backlight are as follows:

1. Press "✱" button and turn on the backlight.

2. Press "✱" button again and turn off the backlight; or after about 10 seconds the backlight will turn off automatically.

Note:

1. The backlight source is LED, the working current is larger, although the instrument is equipped

with a timing circuit (the timing time is about 10 seconds, that is, it will turn off automatically about 10seconds after the backlight is turned on), often using the backlight will shorten the battery life, so in unnecessary circumstances, the use of backlight source should be minimized.

2. When the battery voltage is =3.6V, the display shows ‘ ” (undervoltage) symbol. But in the circumstance of using the backlight, when the battery voltage is =3.6V, because its larger working current makes the battery voltage drop, “ ” symbol may be displayed (when “ ” symbol displays, the accuracy of the measurement cannot be guaranteed), at this time it’s fine that do not replace the battery, continue to use it in the circumstance of not using backlight until “ ” symbol is displayed, then make replacement.

Data Hold

1. In the process of measurement, if reading hold is needed, press “HOLD” button, the display value on the screen will be locked.

2. Press “HOLD” button again to clear the state of reading hold.

General Technical Specifications

- Environment condition of using:

  600V CAT.IV and 1000V CAT.III

  Pollution level: 2

  Altitude< 2000 m

  Working environment temperature and humidity: 0~40°C (<80% RH, <10°C non condensing)

  Storage environment temperature and humidity:-10~60°C (<70% RH,remove the battery)

- Temperature coefficient: 0.1× accuracy /°C (<18°C or >28°C)

- Maximum voltage allowed between the measuring terminal and the ground: 1000V DC or 750V AC RMS

- Fuse protection: mA shift: fuse F400mA/1000V; 10A shift: F10A/1000V

- Sampling rate: about 3 times/second.

- Display: 4000 counter readout, temperature and humidity are displayed separately. Automatically display the unit symbols according to the shift of the measurement function.

- Super range indication: it displays “OL”.

- Low battery indication: when the battery voltage is lower than the normal working voltage, “” will be displayed.
- Input polarity indication: automatically display “–”.
- Power supply: 4 x 1.5V AA batteries.
- Dimension: 204(L)×94(W)×57(H) mm.
- Weight: about 410g (including batteries).

Accuracy Specifications

The accuracy applies within one year after the calibration.

Reference condition: the environment temperature 18°C to 28°C, the relative humidity is no more than 80%, accuracy: ±(% reading + word).

DC Voltage

Range	Resolution	Accuracy	Input impedance:10MO Overload protection: 1000V DC or 750V AC(RMS) Maximum input voltage:1000V DC **Note:** For small voltage range, if the probe doesn't contact the circuit to be measured, it's normal that there may be bouncing readings which is caused by high sensitivity of the instrument. When the probe is connected to the circuit to be measured, you can obtain the true measurement value.
400mV	0.1mV	±(0.7% reading+2)	
4V	0.001V		
40V	0.01V		
400V	0.1V		
1000V	1V		

AC Voltage

Range	Resolution	Accuracy	
400mV	0.1mV	±(0.8% reading+3)	Input impedance: 10MO Overload protection:1000V DC or 750V AC (RMS) Maximum input voltage:750V AC (RMS) Frequency range: 50 ~ 60Hz; **Note:** For small voltage range, if the probe doesn't contact the circuit to be measured, it's normal that there may be bouncing readings which is caused by high sensitivity of the instrument. When the probe is connected to the circuit to be measured, you can obtain the true measurement value.
4V	0.001V		
40V	0.01V		
400V	0.1V		
750V	1V	±(1.0% reading +3)	

DC Current

Range	Resolution	Accuracy	
400μA	0.1μA	±(1.2% reading +3)	Overload protection: μA, mA Range: 400mA/1000V fuse (ultra-speed) 10A range: 10A/1000V fuse (ultra-speed) Maximum input current: mA socket: 400mA 10A socket: 10A
4000μA	1μA		
40mA	0.01mA		
400mA	0.1mA		
4A	0.001A	±(2.0% reading +10)	
10A	0.01A		

AC Current

Range	Resolution	Accuracy	Overload protection: μA? mA range: 400mA/1000V fuse (ultra-speed fuse) 10A range: 10A/1000V fuse (ultra-speed fuse) Maximum input current: mA socket: 400mA 10A socket: 10A Frequency range: 40~ 400Hz Response: average value (sinusoidal RMS)
400μA	0.1μA	±(1.5% reading +5)	
4000μA	1μA		
40mA	0.01mA		
400mA	0.1mA		
4A	0.001A	±(3.0% reading +10)	
10A	0.01A		

Resistance

Range	Resolution	Accuracy	Overload protection:1000V DC or 750V AC (RMS) The open circuit voltage: about 0.5V
400O	0.1O	±(1.2% reading+2)	
4kO	0.001kO		
40kO	0.01kO		
400kO	0.1kO		
4MO	0.001MO		
40MO	0.01MO	±(2.0% reading +5)	

Connectivity Test

Range	Function	
•)))	The resistance of the measured circuit is less than 50Ω. The buzzer contained in the instrument will sound.	The open circuit voltage is about 0.5V Overload protection:1000V DC or 750V AC (RMS)

Capacitance

Range	Resolution	Accuracy	Overload protection: 1000V DC or 750V AC (RMS) **Note:** **The parameter does not include the errors caused by the capacitor and capacitance substrate (in 40nF range it may be up to a few nF). The user can use the relative value measurement function to reduce the error.**
40nF	0.01nF	±(3.0% reading+3)	
400nF	0.1nF		
4μF	0.001μF		
40μF	0.01μF		
100μF	0.1μF		

Frequency and Duty

Range	Resolution	Accuracy	
9.999Hz	0.001Hz	±(2.0% reading+5)	Through shift of Hz: 1) Measurement range: 0 ~ 200kHz 2) Input voltage range: 0.5~10V AC(RMS) (the input voltage should be increased with the increase of the measured frequency) 3) Overload protection: 1000V DC or 750V AC (RMS) Through shift of V: 1) Measurement range: 0 ~ 40kHz 2) Input voltage range: 0.5~750V AC(RMS) (the input voltage should be increased with the increase of the measured frequency) 3) Maximum input voltage:1000V DC or 750V AC (RMS) Through shift of μA, mA, A: 1) Measurement range: 0 ~ 40kHz 2) Input signal range: = ¼ range(the input current should be increased with the increase of the measured frequency) 3) Input protection: μA, mA Range: F400mA/1000V; 10A Range: F10A/1000V
99.99Hz	0.01Hz	±(1.5% reading+5)	
999.9Hz	0.1Hz		
9.999kHz	1Hz		
99.99kHz	10Hz	±(2.0% reading+5)	
199.9kHz	100Hz		
>200kHz		Just for reference	
0.1~99.9%	0.1%	± 3.0%	

Note:

Compared with the range of measurement by using the “Hz” function of voltage and current shifts, using shift “Hz” to measure the frequency has larger range, however the measurement values exceeding the scope in above table are just for reference.

Diode Test

Range	Resolution	Function	Forward DC current is about1mA Reverse DC voltage is about 1.5V Overload protection:1000V DC or 750V AC (RMS)
►	1mV	It displays the approximate forward voltage value of the diode	

Noise (dB)

Range	Resolution	Accuracy	Frequency range: 100 ~ 8000Hz
40-100dB	0.1 dB	± 3.5%dB at 94dB, 1kHz Sine wave	

Illuminance (Lux)

Range	Resolution	Accuracy	Repeatability: ±2%
Lux (4000)	1 Lux	±(5.0% reading+10) Calibrated under standard incandescent lamp with color temperature2856k.	
×10Lux(40000)	10Lux		

Humidity(RH, shown in humidity display area)

Range	Resolution	Accuracy	Working temperature: 0? ~ 40?

20 - 95%	0.1%	± 5.0%RH	Sampling period: about 20s

Temperature

Normal temperature (temperature display area)

Range	Resolution	Accuracy		
?	0.1?	0? to 40?	± 2?	Sampling period: about 20s
?	0.1?	32? to 104?	± 4?	

Temperature measurement by thermocouple (main display area)

Range	Resolution	Accuracy		
?	1?	-20? ~ 0?	± 5.0% readingor± 3?	Overload protection: fuse 400mA/1000V
		0? ~ 400?	± 1.0% reading or ± 2?	
		400? ~ 1000?	± 2.0% reading	
?	1?	-4? ~ 32?	± 5.0% reading or ± 6?	
		32? ~ 752?	± 1.0% reading or ± 4?	
		752? ~ 1832?	± 2.0% reading	

Maintenance

General

Regularly clean the outer cabinet with a damp cloth and mild detergent. Do not use abrasive or solvent.

If there's dust or wet in the input socket, the measurement may be affected. To clean the input socket:

1. Turn off the power supply of the instrument, and remove the probe on the instrument.

2. Clean the dirt on the input socket.

3. Wipe the internal of each input socket by new cotton stick dipped with isopropyl alcohol.

4. Apply a thin layer of high quality engine oil inside of each socket by a new cotton stick.

Replace Battery and Fuse

Warning

To ensure safety operation and product maintenance, when the instrument will not be used for an extended period of time, please remove the batteries to avoid any product damage caused by battery leakage.

To prevent possible electric shock, fire or personal injury:

- **Only use exactly the same replacement parts to replace the blown fuse to prevent the hazard caused by the arc flash.**

- **Please use the specified replacement fuse only.**
- **The batteries contain dangerous chemicals which may cause burns or explosion. If exposed to chemical substances, please wash with water and go to a doctor in time for treatment.**
- **When it indicates low battery, please replace the battery in time to prevent incorrect measurement.**